Clear - 1610



92 87 88 89 8H

93

MOQ 500u.

Decoration:

BIC® STYLE
1610
A SP: max. 2 col.

BIC® STYLE CLEAR
1610
B SP: max. 1 col.

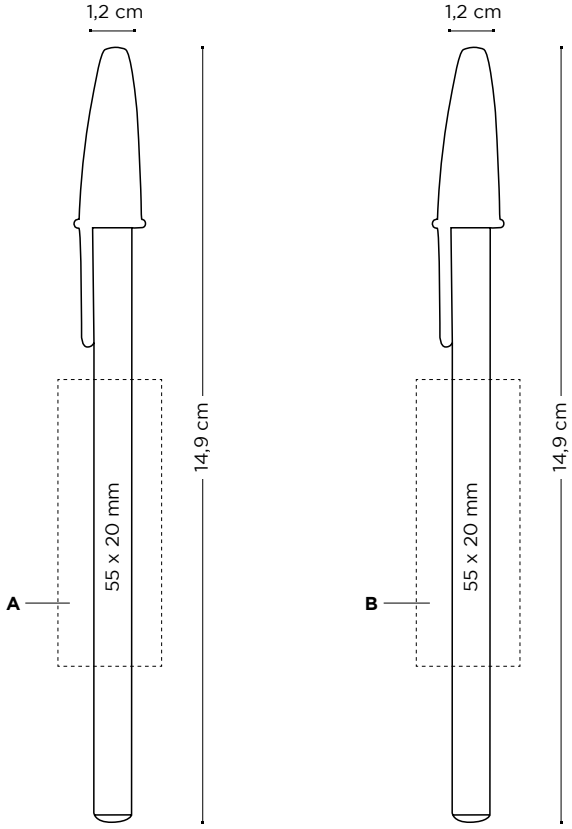

Price (DKK)

BIC® STYLE / BIC® STYLE CLEAR 1610	500-999	1000-2499	2500-4999	5000-9999	10000-24999	25000-49999
SP	3,21	2,91	2,76	2,61	ⓘ	ⓘ
Additional imprint charge per colour & position						
SP	0,97	0,97	0,97	0,90	ⓘ	ⓘ

Prices include 1 colour screenprint in one position.
ⓘ Price under request.

Writing modes:

Ballpen

M

Printing techniques:

(SP)
SCREEN
PRINTING

New optional special packaging:



ECO Sleeve / Plastic Pouch

+ INFO pag. 288

External packaging:



500 ± 3,5 Kg



ROUND STIC®

The iconic BIC® Round Stic® offers timeless style and high quality. Its classic design is easy to identify and symbolises long-term reliability.



BIC® ROUND STIC®

48h **

MIX & MATCH

MANUFACTURED AND PRINTED IN BIC FACTORIES

Iconic BIC® Boy is embossed

Opaque - 1010



Frosted - 1010





	01	12	03	05	07	18	02	69	63	71	66	68	67	40
Colour ink	●	●	●	●	●	●	●	●	●	●	●	●	●	●
	●	●	●	●	●	●	●	●	●	●	●	●	●	●
	●	●	●	●	●	●	●	●	●	●	●	●	●	●
				100%									100%	

Red Ink available under request

BIC graphic

**48h not available in Digital finishes

MADE FROM 94% OF
RECYCLED MATERIAL* &
100% RECYCLABLE

ecolutions®
Opaque - 1E10



1E/8E 1E/7E 1E/10E 1E/3E

ecolutions®
Frosted - 1E10

2E/8E 2E/7E 2E/10E 2E/3E

*The percentage is calculated on total weight of product excluding cartridge

Digital Printing!

BIC® ROUND STIC® DIGITAL
ecolutions®
VERSION AVAILABLE
Opaque - 1010/1E10



1E/10E

available in white barrel

01

MOQ 500u.

Standard colours combination

ecolutions® Standard colours combination

Plug

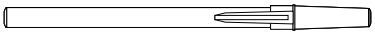

OPAQUE 01 12 10 03 05 20 04 07 18 02

FROSTED 69 63 71 66 68 67 40

8E 7E 10E 3E

Clip

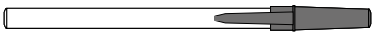



OPAQUE 01 12 10 03 05 20 04 07 18 02



FROSTED 69 63 71 66 68 67 40



8E 7E 10E 3E

Section

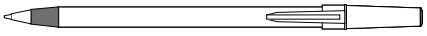



OPAQUE 01 12 10 03 05 20 04 07 18 02



FROSTED 69 63 71 66 68 67 40



8E 7E 10E 3E

Barrel





OPAQUE 01 12 03 05 07 18 02



FROSTED 69 63 71 66 68 67 40

OPAQUE FROSTED

1E 2E

Exact colour match:

≥ 10.000 units

Add the Möbius loop to your artwork at no additional charge. Please specify it on your order. (Möbius loop imprint defaults to left-hand hand corner.)

Writing modes:

Ballpen



M

Printing techniques:



(SP) SCREEN PRINTING



(DG) DIGITAL

New optional special packaging:



ECO Sleeve / Plastic Pouch

+ INFO pag. 288

External packaging:



500 ± 2,5 Kg

MADE IN SPAIN

Decoration:

BIC® ROUND STIC®
1010
ecolutions® 1E10
A SP: max. 3 col.
B SP: max. 1 col.
C DG: full-colour (available in white barrel)

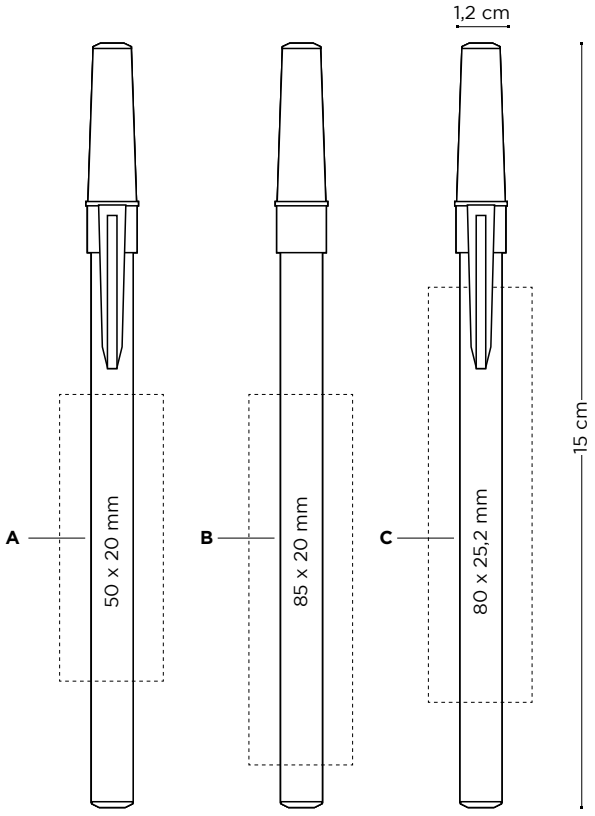

Price (DKK)

BIC® ROUND STIC® 1010 / ecolutions® 1E10	500-999	1000-2499	2500-4999	5000-9999	10000-24999	25000-49999
SP	0,20	0,98	0,88	0,82	0,78	0,69
DG	1,09	0,90	0,69	0,63	ⓘ	ⓘ

Additional imprint charge per colour & position

SP	0,97	0,97	0,97	0,95	0,93	0,93

Prices include one imprint in one position according to specified technique.
ⓘ Price under request.

48h

MANUFACTURED AND PRINTED IN BIC FACTORIES

BIC® M10®CLIC
1590

Iconic BIC® Boy is embossed

Side push button



	01	8G	10	14	59	3D	04	02
Colour ink	●	●	●	●	●	●	●	●

MOQ 500u.

Decoration:

BIC® M10® CLIC
1590
A SP: max. 2 col.

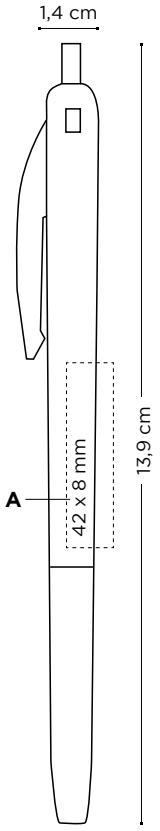

Price (DKK)

BIC® M10® CLIC 1590	500-999	1000-2499	2500-4999	5000-9999	10000-24999	25000-49999
SP	3,88	3,73	3,51	3,28	3,06	2,76

Additional imprint charge per colour & position						
SP	0,97	0,97	0,97	0,9	0,82	0,82

Prices include 1 colour screenprint in one position.

Writing modes:

Ballpen



M

Printing techniques:



(SP)
SCREEN
PRINTING

New optional special packaging:



ECO Sleeve / Plastic Pouch / Window Box

+ INFO pag. 288

External packaging:



1000 ± 8 Kg

Check out the video

MADE IN FRANCE

White Colour MADE IN SAF

MEDIA CLIC

One of the best seller in the industry, functional and already recognized design, our BIC® Media Clic is a long lasting product available in different materials, choose between the Standard, Recycled and BIO Version.
Be inspire with the wide range of finishes and colours using them as a perfect match for enhance your brand.





MEDIA CLIC

48h*

MIX & MATCH

MANUFACTURED AND PRINTED IN BIC FACTORIES

Polished Ballpen - 1025

Iconic BIC® Boy is embossed



1T	8T	6P	3T	6T	9T	5P	5T	4T	7T	8L	2T
Colour ink											

Red Ink available under request

*48h not available in Digital finishes

Clear Ballpen - 1025

More than 10000 clicks!



1R 4D 92 87 95 93 88 72 — 4R — 7R 91 91

100%

48h **

MIX & MATCH

MANUFACTURED AND PRINTED IN BIC FACTORIES

Opaque Ballpen 1025 / Pencil 1028



01	12	10	03	5C	2D	5G	05	3D	04	07	18	02
Colour ink												
Red Ink available under request												

**48h not available in Digital finishes

Frosted Ballpen 1025 / Pencil 1028

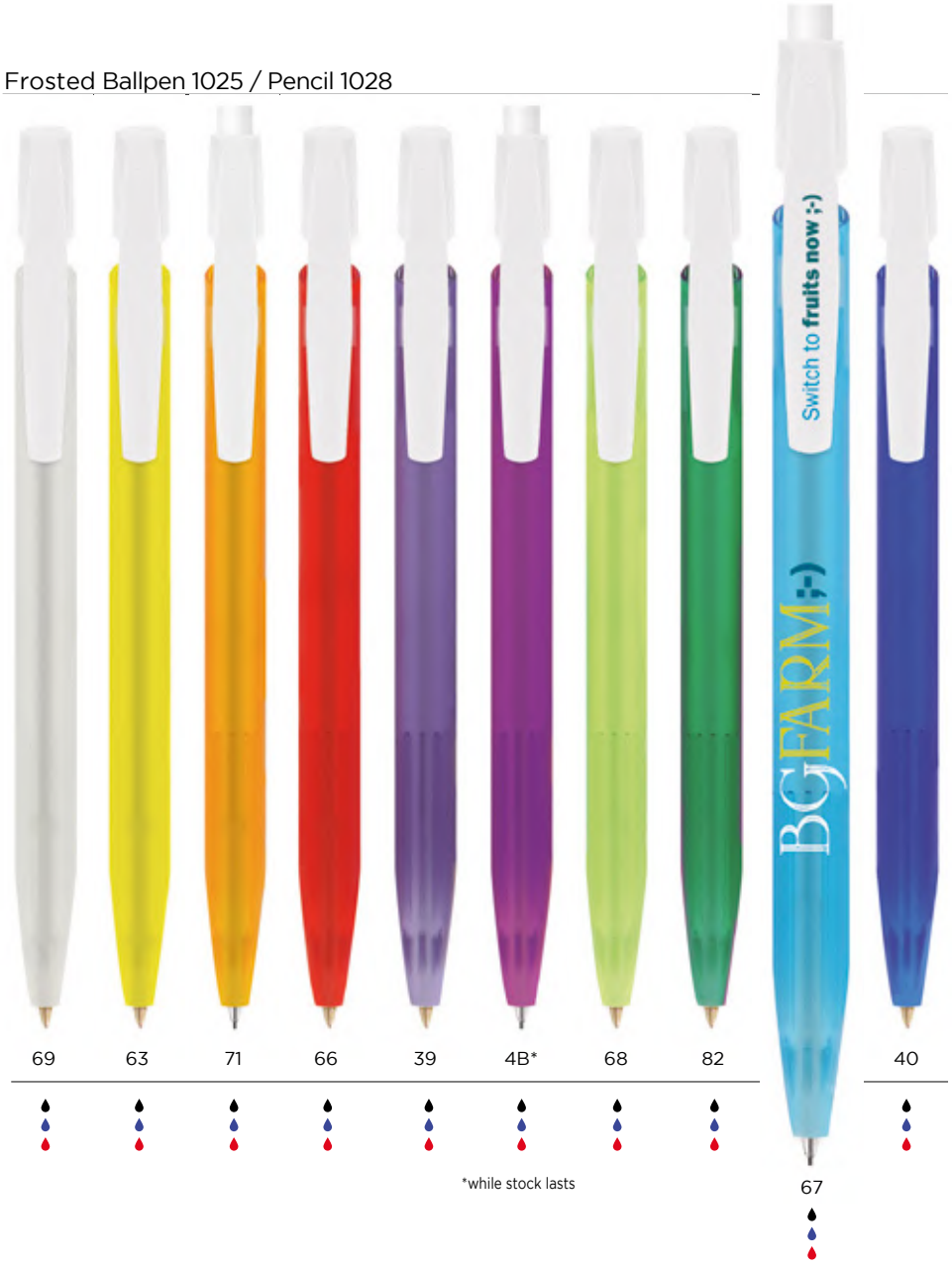

69 63 71 66 39 4B* 68 82 67 40

*while stock lasts

MADE FROM 92% OF RECYCLED MATERIAL* & **100% RECYCLABLE**

ecolutions®
Opaque
Ballpen - 1E25
Pencil 1E28



1E 3E

*The percentage is calculated on total weight of barrel

MEDIA CLIC

48h **

MIX & MATCH

MANUFACTURED AND PRINTED IN BIC FACTORIES

Opaque Ballpen 1020
Pencil 1021



01/12 01/03 01/05 01/07 01/02

Colour ink

100%

Red Ink available under request

Frosted Ballpen 1020 / Pencil 1021



01/69 69/69 71/69 66/69 82/69 40/69

100%

**48h not available in Digital finishes

MADE FROM 50% OF
RECYCLED MATERIAL*
& **100% RECYCLABLE**

ecolutions®
Opaque Ballpen 1E20
Pencil 1E21



01/12 01/03 01/05 01/02

100%

01/07

*The percentage is calculated
on total weight of barrel

Digital Printing!

BIC® MEDIA CLIC DIGITAL
Opaque NEW!
Ballpen 1025 / 1E25
Pencil 1028 / 1E28



01

Only available in
white barrel

100%

01

BIC® MEDIA CLIC GRIP DIGITAL
Opaque
Ballpen 1020 / 1E20
Pencil 1021 / 1E21



01/05

Only available in
white barrel

100%

01/12

Check out the video

MEDIA CLIC

MOQ 500u.

Standard colours combination ecolutions® Standard colours combination

Plug

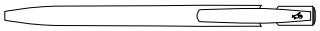

OPAQUE 01 12 10 03 5C 2D 13 84* 85* 5G 05 3D 83* 04 07 18 02 FROSTED 69

Clip





OPAQUE 01 12 10 03 5C 2D 13 84* 85* 5G 05 3D 83* 04 07 18 02 FROSTED 69

Barrel



Barrel & Grip

OPAQUE 01 12 10 03 5C 2D 13 85* 5G 05 3D 83* 04 07 3C 18 02 01/12 01/03 01/05 01/07 01/02

Barrel & Grip

FROSTED 69 63 71 66 39 4B* 68 82 67 40 01/69 69/69 71/69 66/69 82/69 40/69

POLISHED 1T 8T 6P 3T 6T 9T 5P 5T 4T 7T 8L 2T

CLEAR 1R 4D 92 87 95 93 88 72 4R 7R 91

Add the Möbius loop to your artwork at no additional charge. Please specify "Print the Möbius loop" on your order. (Möbius loop imprint defaults to left-hand hand corner.)

OPAQUE 1E 3E

Barrel & Grip OPAQUE

01/12 01/03 01/05 01/07 01/02

Exact colour match:

≥ 10.000 units 1025/1028 1E25/1E28 1E20/1E21

≥ 20.000 units 1020/1021 1E20 digital/1E21 digital

Writing modes:

Ballpen **M**

Mechanical pencil **MP** Ø0,7mm

*Until stock lasts

Printing techniques:

(SP) SCREEN PRINTING

(DG) DIGITAL

Decoration:

BIC® MEDIA CLIC
1025 (ballpen)
1028 (pencil)
ecolutions® 1E25 (ballpen)
ecolutions® 1E28 (pencil)
A SP: max. 4 col.
B SP: max. 2 col.
C DG: full-colour

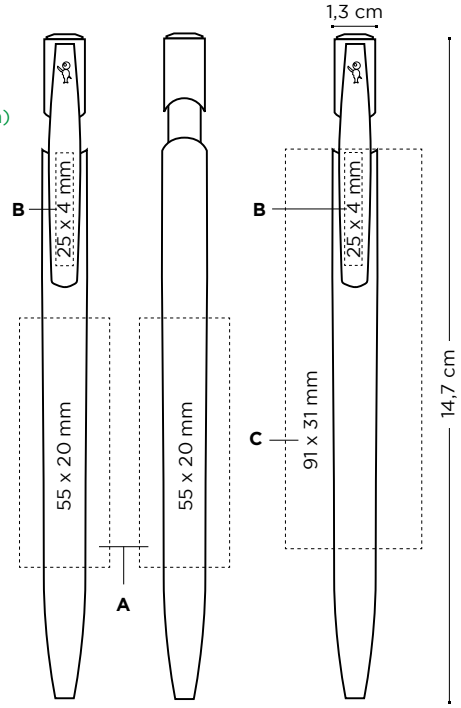

BIC® MEDIA CLIC GRIP
1020 (ballpen)
1021 (pencil)
ecolutions® 1E20 (ballpen)
ecolutions® 1E21 (pencil)
D SP: max. 4 col.
E SP: max. 2 col.
F DG: full-colour

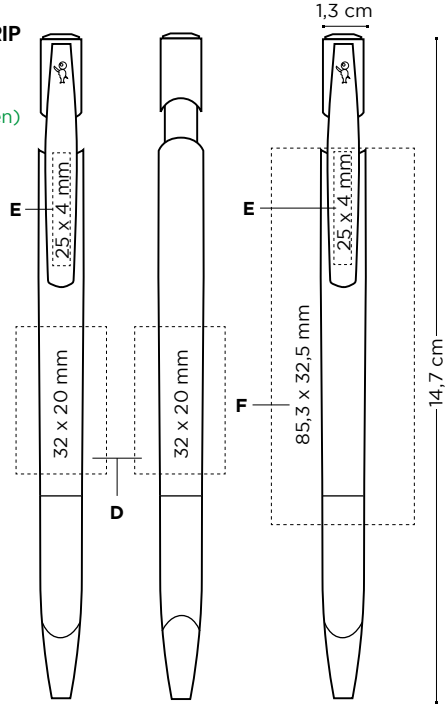

Price (DKK)

BIC® MEDIA CLIC	500-999	1000-2499	2500-4999	5000-9999	10000-24999	25000-49999
1025 / ecolutions® 1E25 (ballpen)						
SP	[illegible]	[illegible]	[illegible]	[illegible]	[illegible]	[illegible]
DG	[illegible]	[illegible]	[illegible]	[illegible]	ⓘ	ⓘ
1028 / ecolutions® 1E28 (pencil)						
SP	[illegible]	[illegible]	[illegible]	[illegible]	[illegible]	[illegible]
DG	[illegible]	[illegible]	[illegible]	[illegible]	ⓘ	ⓘ

Additional imprint charge per colour & position

SP	[illegible]	[illegible]	[illegible]	[illegible]	[illegible]	[illegible]

Prices include one imprint in one position according to specified technique.
ⓘ Price under request.

Price (DKK)

BIC® MEDIA CLIC GRIP	500-999	1000-2499	2500-4999	5000-9999	10000-24999	25000-49999
1020 / ecolutions® 1E20 (ballpen)						
SP	[illegible]	[illegible]	[illegible]	[illegible]	[illegible]	[illegible]
DG	[illegible]	[illegible]	[illegible]	[illegible]	ⓘ	ⓘ
1021 / ecolutions® 1E21 (pencil)						
SP	[illegible]	[illegible]	[illegible]	[illegible]	[illegible]	[illegible]
DG	[illegible]	[illegible]	[illegible]	[illegible]	ⓘ	ⓘ

Additional imprint charge per colour & position

SP	[illegible]	[illegible]	[illegible]	[illegible]	[illegible]	[illegible]

Prices include one imprint in one position according to specified technique.
ⓘ Price under request.

External packaging:



500 ± 4,1 Kg

New optional special packaging:



ECO Sleeve / Plastic Pouch / Window Box

+ INFO pag. 288

External packaging:



500 ± 4,3 Kg

Check out the video

MADE IN SPAIN

MEDIA CLIC SHINE

New!

Opaque Ballpen - 1975

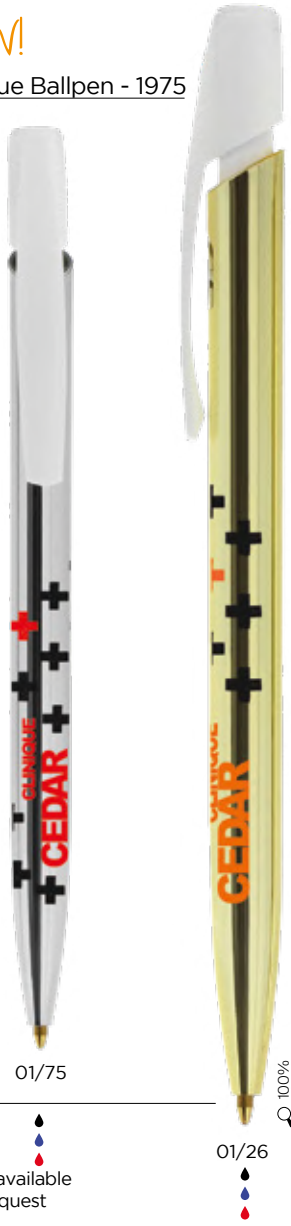

01/75

100%

Colour ink

Red Ink available under request

01/26

MIX & MATCH

MANUFACTURED AND PRINTED IN BIC FACTORIES

BIC® MEDIA CLIC SHINE
1975
A SP: max. 2 col.
B SP: max. 2 col.

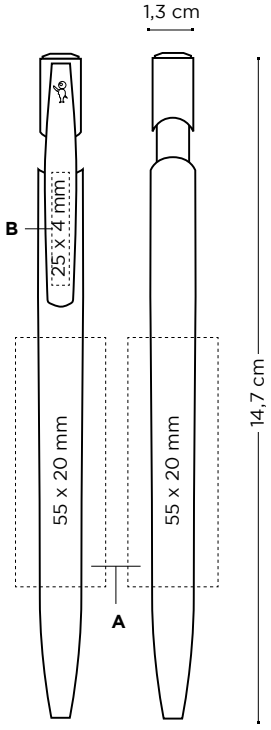

Price (DKK)

BIC® MEDIA CLIC SHINE 1975	500-999	1000-2499	2500-4999	5000-9999	10000-24999	25000-49999
SP	9,10	8,50	7,91	7,31	6,86	6,42
SP (premium)	10,15	9,47	8,80	8,13	7,61	7,09
Additional imprint charge per colour & position						
SP	0,97	0,97	0,97	0,90	0,82	0,82

Prices include 1 colour screenprint in one position.

MOQ 500u.

Standard colours combination

Plug

OPAQUE 01 12 10 03 5C 13 2D 84 85 5G 05 3D 83 04 07 18 02 FROSTED 69 PREMIUM 35

Clip

OPAQUE 01 12 10 03 5C 13 2D 84* 85* 5G 05 3D 83* 04 07 18 02 FROSTED 69

Barrel

SHINE 01/26 01/75

Writing modes:

Ballpen

M

*until stock lasts

Printing techniques:

(SP) SCREEN PRINTING

New optional special packaging:

ECO Sleeve / Plastic Pouch / Window Box

+ INFO pag. 288

External packaging:

500 ± 4,1 Kg

MADE IN SPAIN

THE TOP PRIORITY OF THE BIC® MEDIA CLIC BIO ECOLUTIONS® LIFE CYCLE IS SUSTAINABILITY



BIODEGRADABLE PEN:

No ink left in the pen?
No problem, it's compostable.
The barrel is **100% biodegradable** while the clip is **100% recyclable.**

BIO-BASED MATERIAL:

The barrel is made from **70% bio-based material.**
The colourants are **100% bio.**

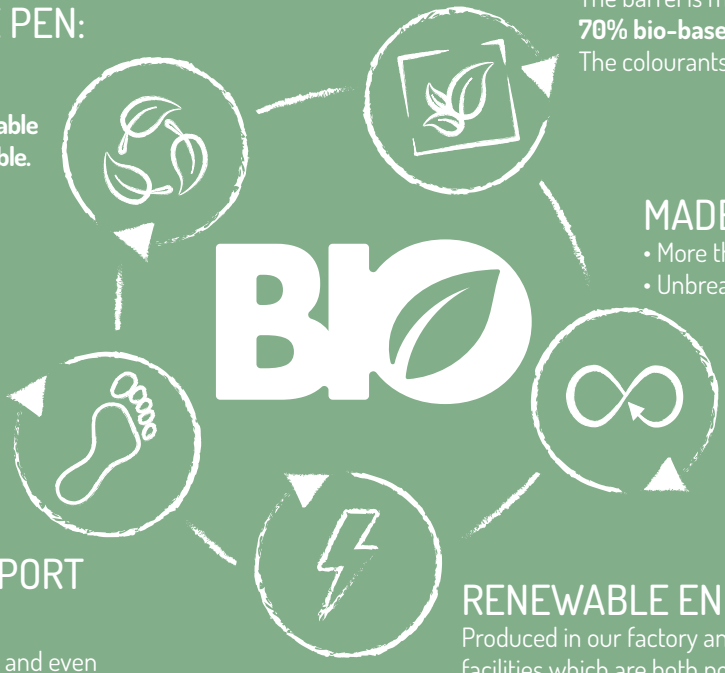

MADE TO LAST:

- More than **10,000 clicks**
- Unbreakable clip

LOW TRANSPORT IMPACT:

Production, printing and even **raw materials made in Europe**

RENEWABLE ENERGY:

Produced in our factory and printing facilities which are both powered with **100% renewable electricity.**

BIO New!

MIX & MATCH

MANUFACTURED AND PRINTED IN BIC FACTORIES

MADE FROM 70% OF BIO-SOURCED* &
100% BIODEGRADABLE MATERIAL

Opaque Ballpen - 1972



01BIO 012BIO 03BIO 05BIO 04BIO 02BIO

Colour ink

Red Ink available under request

*The percentage is calculated on total weight of barrel, biodegradable under industrial conditions

MOQ 500u.

Standard colours combination

Plug

OPAQUE 01 12 10 03 5C 13 2D 84 85 5G 05 3D 83 04 07 18 02 FROSTED 69

Clip



OPAQUE 01 12 10 03 5C 13 2D 84* 85* 5G 05 3D 83* 04 07 18 02 FROSTED 69

Barrel



OPAQUE 01BIO 012BIO 03BIO 05BIO 04BIO 02BIO

BIC® MEDIA CLIC BIO
ecolutions®
1972
A SP: max. 4 col.
B SP: max. 2 col.

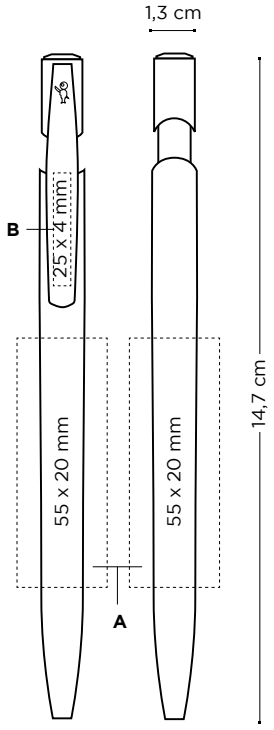

Price (DKK)

BIC® MEDIA CLIC BIO ecolutions® 1972	500-999	1000-2499	2500-4999	5000-9999	10000-24999	25000-49999
SP	0,66	0,32	0,90	0,55	0,53	0,53

Additional imprint charge per colour & position

SP	0,47	0,47	0,47	0,28	0,28	0,28

Prices include 1 colour screenprint in one position.

Writing modes:

Ballpen



M

*until stock lasts

Printing techniques:



(SP)
SCREEN
PRINTING

New optional special packaging:



ECO Sleeve / Plastic Pouch / Window Box

+ INFO pag. 288

External packaging:



500 ± 4,3 Kg

MADE IN
SPAIN





CLIC STIC

Modern, flexible, reliable. That's how BIC® Clic Stic is!
A large variety of finishes such as Digital, Stylus, Softfeel®
or Mini, and thousands of colour combinations!



48h **

MIX & MATCH

MANUFACTURED AND PRINTED IN BIC FACTORIES

MADE FROM 78% OF RECYCLED MATERIAL* & **100% RECYCLABLE**

Opaque - 1000



Iconic BIC® Boy is embossed

01	12	03	05	04	07	18	02
Colour ink								

100%

Red Ink available under request

ecolutions®
Opaque - 1E00



1E/8E	1E/7E	1E/10E	1E/3E
Colour ink			

100%

*The percentage is calculated on total weight of barrel

**48h not available in Digital finishes

Break resistant clip!

Frosted - 1000



69 63 71 66 68 67 40

100%

MADE FROM 78% OF RECYCLED MATERIAL* & **100% RECYCLABLE**

ecolutions®
Frosted
1E00



2E/8E 2E/7E 2E/10E 2E/3E

100%

*The percentage is calculated on total weight of barrel

BIC® CLIC STIC MINI
Opaque - 1892



01

100%



CLIC STIC

48h*

MIX & MATCH

MANUFACTURED AND PRINTED IN BIC FACTORIES

BIC® CLIC STIC SOFTFEEL®

Opaque - 1005



20 07

Colour ink

Red Ink available under request

100%

02

Frosted - 1005



40

BIC® CLIC STIC STYLUS

Opaque - 1847



01 03 04



100%

07



18 02

*48h not available in Digital finishes

Digital Printing!

BIC® CLIC STIC DIGITAL
Opaque
1000 / 1E00



01

BIC® CLIC STIC MINI DIGITAL
Opaque
1892



01

BIC® CLIC STIC STYLUS DIGITAL
Opaque
1847



01

Only available in white barrel

MOQ 500u.

Standard colours combination

Plug

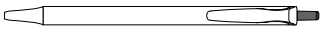

OPAQUE 01 12 10 03 05 20 04 07 18 02

FROSTED 69 63 71 66 68 67 40

Clip

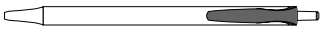



OPAQUE 01 12 10 03 05 20 04 07 18 02



FROSTED 69 63 71 66 68 67 40

Section

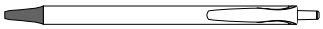



OPAQUE 01 12 10 03 05 20 04 07 18 02

stylus



FROSTED 69 63 71 66 68 67 40



OPAQUE 02

Barrel





OPAQUE 01 12 03 05 04 07 18 02

softfeel®



OPAQUE 20 07 02

Mini

OPAQUE 01

softfeel®



FROSTED 69 63 66 68 67 40 71



OPAQUE 40

Exact colour match:

≥ 10.000 units

Writing modes:

Ballpen



M

Printing techniques:



(SP)
SCREEN
PRINTING



(DG)
DIGITAL

MOQ 500u.

ecolutions® Standard colours combination

Plug

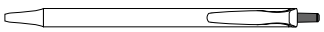

OPAQUE 01 12 10 03 05 20 04 07 18 02

FROSTED 69 63 71 66 68 67 40

Clip



OPAQUE 8E 7E 10E 3E

Section



OPAQUE 8E 7E 10E 3E

Barrel

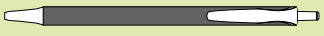

OPAQUE 1E FROSTED 2E

Add the Möbius loop to your artwork at no additional charge. Please specify "Print the Möbius loop" on your order. (Möbius loop imprint defaults to left-hand hand corner.)

Exact colour match:

≥ 10.000 units

Writing modes:

Ballpen



M

Printing techniques:



(SP) SCREEN PRINTING



(DG) DIGITAL

Decoration:

BIC® CLIC STIC
1000
ecolutions® 1E00

BIC® CLIC STIC STYLUS
1847

A SP: max. 3 col.
B SP: max. 1 col.
C SP: max. 2 col.
D DG: full-colour (area for text) (available in white barrel)
E DG: full-colour (area for images) (available in white barrel)

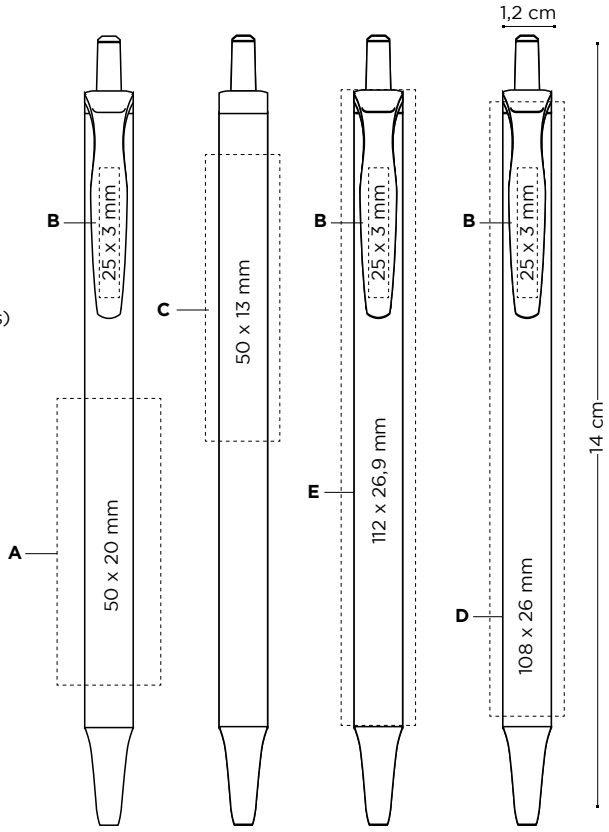

Price (DKK)

BIC® CLIC STIC 1000 / ecolutions® 1E00	500-999	1000-2499	2500-4999	5000-9999	10000-24999	25000-49999
SP	0,50	0,00	0,00	0,00	0,00	0,00
DG	0,00	0,00	0,00	0,00	ⓘ	ⓘ
1847						
SP	0,00	0,00	0,00	0,00	ⓘ	ⓘ
DG	0,00	0,00	0,00	0,00	ⓘ	ⓘ

Additional imprint charge per colour & position

SP	0,00	0,00	0,00	0,00	0,00	0,00

Prices include one imprint in one position according to specified technique.
ⓘ Price under request.

New optional special packaging:



ECO Sleeve / Plastic Pouch

+ INFO pag. 288

External packaging:



500 ± 2,9 Kg

MADE IN SPAIN

BIC® CLIC STIC SOFTFEEL®
1005
A/B SP: max. 1 col.

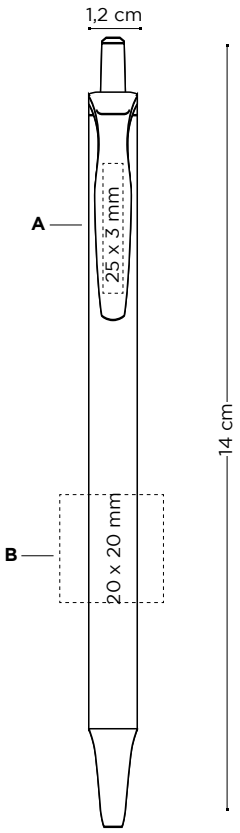

Price (DKK)

BIC® CLIC STIC SOFTFEEL® 1005	500-999	1000-2499	2500-4999	5000-9999	10000-24999	25000-49999
SP	6,56	6,12	5,74	5,30	4,92	4,55
Additional imprint charge per colour & position						
SP	0,97	0,97	0,97	0,90	0,82	0,82

Prices include 1 colour screenprint in one position.

BIC® CLIC STIC MINI
1892
A SP: max. 1 col.
B SP: max. 1 col.
C DG: full-colour (area for text)
(available in white barrel)
D DG: full-colour (area for images)
(available in white barrel)

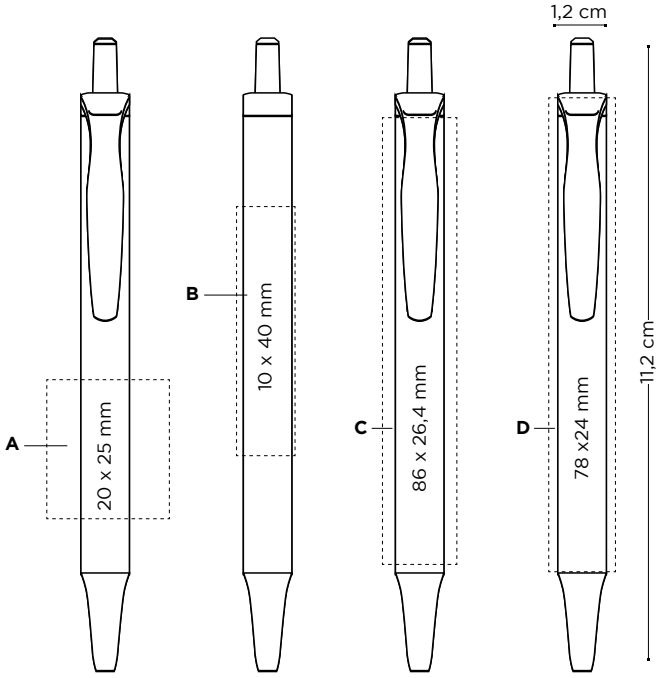

Price (DKK)

BIC® CLIC STIC MINI DIGITAL 1892	500-999	1000-2499	2500-4999	5000-9999	10000-24999	25000-49999
SP	4,77	4,48	4,18	3,95	ⓘ	ⓘ
DG	6,86	6,42	5,97	5,60	ⓘ	ⓘ

Prices include one imprint in one position according to specified technique.
ⓘ Price under request.

New optional special packaging:



ECO Sleeve / Plastic Pouch

+ INFO pag. 288

External packaging:



500 ± 2,9 Kg

External packaging:



500 ± 2,4 Kg



SUPER CLIP

Elegant & versatile design in a wide variety of colours.
Many customization possibilities in its XXL printing area.



SUPER CLIP

48h **

MIX & MATCH

MANUFACTURED AND PRINTED IN BIC FACTORIES

Opaque - 1039

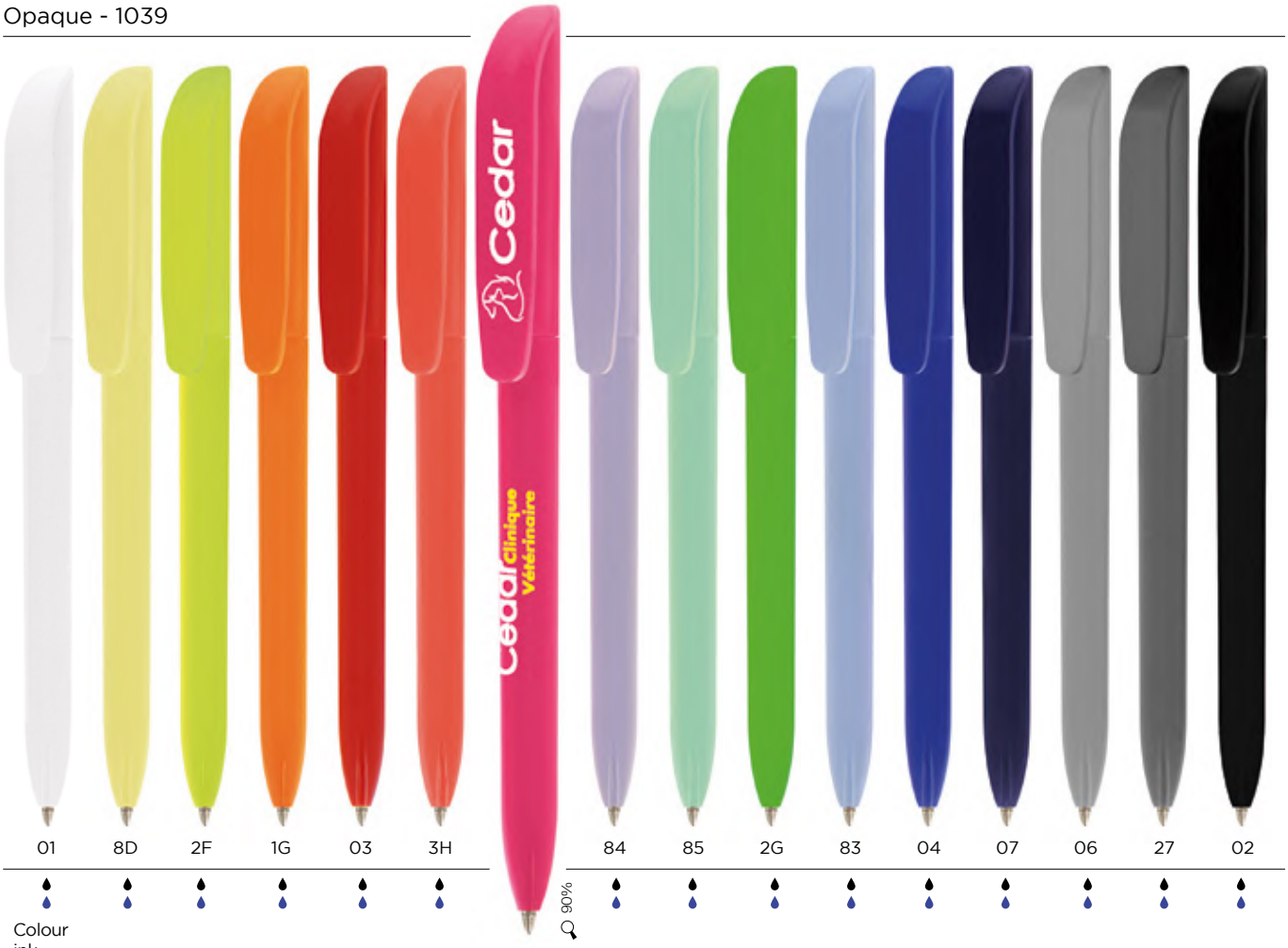

01	8D	2F	1G	03	3H	1P	84	85	2G	83	04	07	06	27	02
Colour ink															

90%



**48h not available in Digital finishes

MADE FROM 83% OF RECYCLED MATERIAL* & **100% RECYCLABLE**

ecolutions®
Opaque
1E50



01/1E

*The percentage is calculated on total weight of barrel

Clear - 1039



51 92 87 95 93 88 86 89

90%

Digital Printing!

BIC® SUPER CLIP DIGITAL
Opaque - 1039



01

Only available in white barrel

90%

01

MOQ 250u.

Standard colours combination

ecolutions® Standard colours combination

Clip

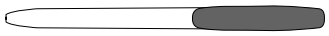



OPAQUE 01 8D 2F 1G 03 3H 1P 84 85 2G 83 04 07 06 27 02



CLEAR 51 92 87 95 93 88 86 89

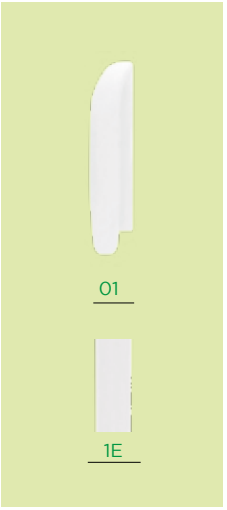

Add the Möbius loop to your artwork at no additional charge. Please specify it on your order. (Möbius loop imprint defaults to left-hand hand corner.)

Barrel





OPAQUE 01 8D 2F 1G 03 3H 1P 84 85 2G 83 04 07 06 27 02



CLEAR 51 92 87 95 93 88 86 89

Exact colour match:

≥ 10.000 units

Writing modes:

Ballpen



M

Printing techniques:



(SP) SCREEN PRINTING



(DG) DIGITAL



(BP) britePix™

New optional special packaging:



ECO Sleeve / Plastic Pouch / Window Box

+ INFO pag. 288

External packaging:



250 ± 2,6 Kg

MADE IN SPAIN

Decoration:

BIC® SUPER CLIP
1039
ecolutions® 1E50
A SP: max. 2 col.
B SP: max. 1 col.
C DG: full-colour
D BP: full-colour
BP Texture: full-colour

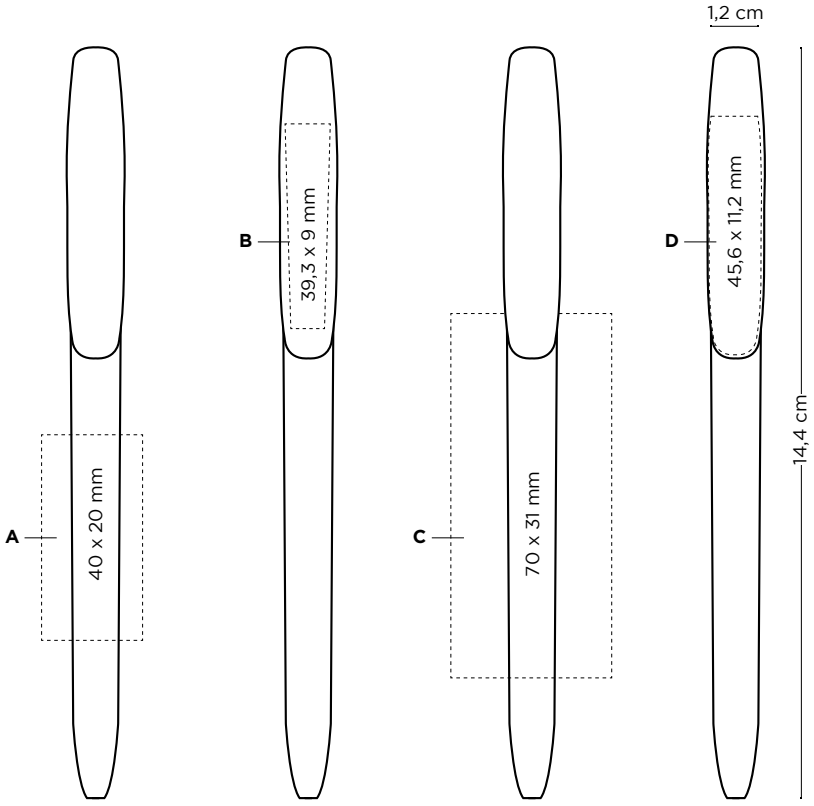

Price (DKK)

BIC® SUPER CLIP 1039 / ecolutions® 1E50	250-499	500-999	1000-2499	2500-4999	5000-9999	10000-24999	25000-49999
SP	4,53	4,39	4,34	4,20	4,39	4,34	4,32
DG	15,35	15,35	19,29	18,28	18,05	ⓘ	ⓘ
BP	15,32	19,29	18,37	18,05	18,39	14,32	14,20

Additional imprint charge per colour & position

SP	0,16	0,17	0,17	0,17	0,33	0,32	0,32
BP	0,29	0,32	0,38	0,34	0,38	ⓘ	ⓘ
***BP Texture**	0,25	0,35	0,44	0,44	0,17	0,33	0,33

Prices include one imprint in one position according to specified technique.
ⓘ Price under request.

SUPER CLIP ADVANCE

48h*

MIX & MATCH

MANUFACTURED AND PRINTED IN BIC FACTORIES

Opaque - 1073



	01	2F	1G	03	3H	1P	2G	04
Colour ink	●	●	●	●	●	●	●	●

BIC graphic

*48h not available in Digital finishes

Silent twist mechanism!



07 06 27 02

Digital Printing!

BIC® SUPER CLIP ADVANCE DIGITAL
Opaque - 1073



01

Only available in white barrel

01

SUPER CLIP ADVANCE

MOQ 250u.

Standard colours combination

Clip

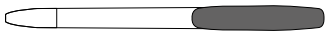



OPAQUE 01 2F 1G 03 3H 1P 2G 04 07 06 27 02



CLEAR 51 92 87 95 93 88 86 89

Barrel





OPAQUE 01 2F 1G 03 3H 1P 2G 04 07 06 27 02

Section

ADVANCE



35

Exact colour match:

≥ 10.000 units

Writing modes:

Ballpen



M

Printing techniques:



(SP) SCREEN PRINTING



(DG) DIGITAL



(BP) britePix™

New optional special packaging:



ECO Sleeve / Plastic Pouch / Window Box

+ INFO pag. 288

External packaging:



500 ± 3,9 Kg

Check out the video

MADE IN SPAIN

Decoration:

BIC® SUPER CLIP ADVANCE
1073
A SP: max. 2 col.
B SP: max. 1 col.
C DG: full-colour
D BP: full-colour
BP Texture: full-colour

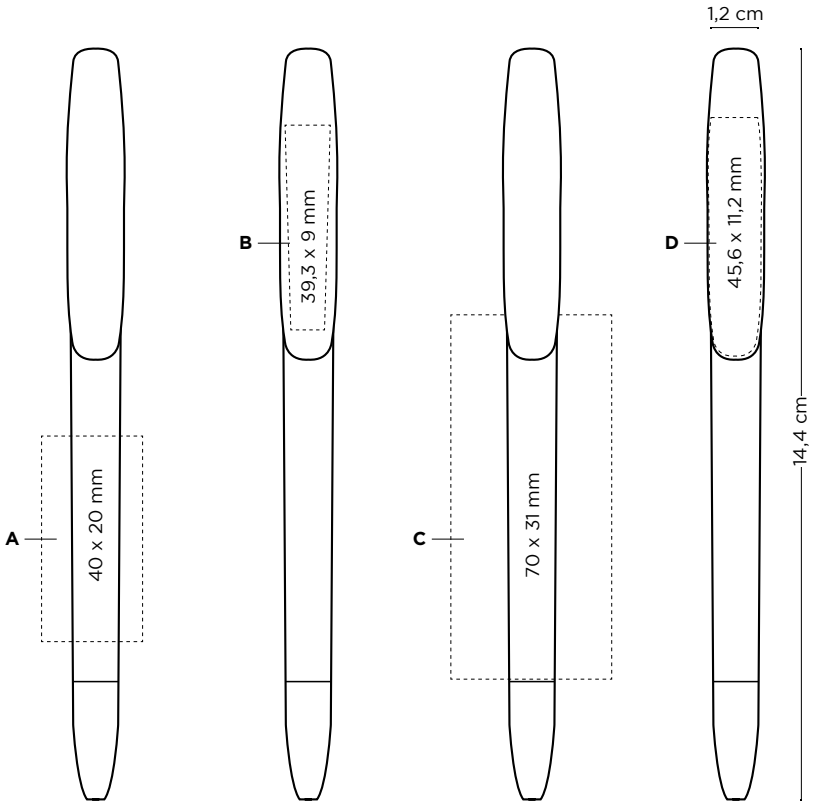

Price (€)

BIC® SUPER CLIP ADVANCE 1073	250-499	500-999	1000-2499	2500-4999	5000-9999	10000-24999	25000-49999
SP	10,74	10,22	9,77	9,47	9,18	8,88	8,50
DG	13,06	12,38	11,86	11,49	11,12	ⓘ	ⓘ
BP	12,38	11,71	11,19	10,82	10,44	10,07	9,62
Additional imprint charge per colour & position							
SP	1,19	0,97	0,97	0,97	0,90	0,82	0,82
BP	1,72	1,57	1,49	1,42	1,34	ⓘ	ⓘ
***BP Texture**	1,27	1,12	1,04	1,04	0,97	0,90	0,90

Prices include one imprint in one position according to specified technique.
ⓘ Price under request.

WIDE BODY™

The right size for showing the true value of your brand! Wide profile and wide variety of possibilities to maximise your message.





BIC® WIDE BODY™

48h **

MIX & MATCH

MANUFACTURED AND PRINTED IN BIC FACTORIES

Iconic BIC® Boy is embossed

Opaque - 1080



01	03	07	18	02
Colour ink				

100%

Red Ink available under request

MADE FROM 94% OF RECYCLED MATERIAL* & **100% RECYCLABLE**

ecolutions®

Opaque - 1E80



100%

*The percentage is calculated on total weight of barrel

1E

**48h not available in Digital finishes

Frosted - 1080



69 63 71 68 67 40

66

48h*

MIX & MATCH

MANUFACTURED AND PRINTED IN BIC FACTORIES

BIC® WIDE BODY™ CHROME

Opaque - 1079



01 03 07 02

100%

Frosted - 1079



69 63 71 68 67 40

100%

Colour ink

Red Ink available under request

18 66

*48h not available in Digital finishes

Digital Printing!

BIC® WIDE BODY™ DIGITAL
Opaque
1080 / 1E80



68 — 03

100%

BIC® WIDE BODY™ MINI DIGITAL
Opaque - 1893



01 — 01

Only available in white barrel

100%

Digital Printing!

BIC® WIDE BODY™ CHROME DIGITAL
Opaque - 1079



68 — 01

100%

BIC® WIDE BODY™ CHROME MINI DIGITAL
Opaque - 1896



01 — 01

100%

MOQ 250u.

Standard colours combination

Plug

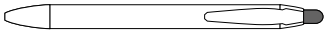

OPAQUE 01 03 07 18 02 FROSTED 69 63 71 66 68 67 40

Chrome

CHROME 35

Clip

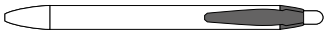



OPAQUE 01 03 07 18 02



FROSTED 69 63 71 66 68 67 40

Barrel



OPAQUE 01 03 07 18 02 FROSTED 69 63 71 66 68 67 40

Section

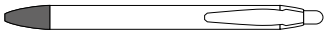



OPAQUE 01 03 07 18 02



FROSTED 69 63 71 66 68 67 40



CHROME 35

Exact colour match:

≥ 10.000 units

Writing modes:

Ballpen



M

Printing techniques:



(SP) SCREEN PRINTING



(DG) DIGITAL

MOQ 250u.

ecolutions® Standard colours combination

Plug

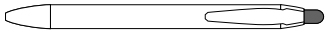

OPAQUE 01 03 07 18 02

FROSTED 69 63 71 66 68 67 40

Clip

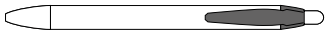



OPAQUE 01 03 07 18 02



FROSTED 69 63 71 66 68 67 40

Barrel

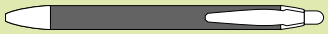

OPAQUE 1E



Add the Möbius loop to your artwork at no additional charge. Please specify "Print the Möbius loop" on your order. (Möbius loop imprint defaults to left-hand hand corner.)

Section

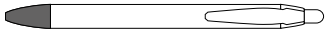



OPAQUE 01 03 07 18 02



FROSTED 69 63 71 66 68 67 40

Exact colour match:

≥ 10.000 units

Writing modes:

Ballpen



M

Printing techniques:



(SP) SCREEN PRINTING



(DG) DIGITAL

Decoration:

BIC® WIDE BODY™
1080
ecolutions® 1E80

BIC® WIDE BODY™ CHROME
1079

A/C SP: max. 2 col.
B/F SP: max. 1 col.
D DG: full-colour (area for images)
E DG: full-colour (area for text)

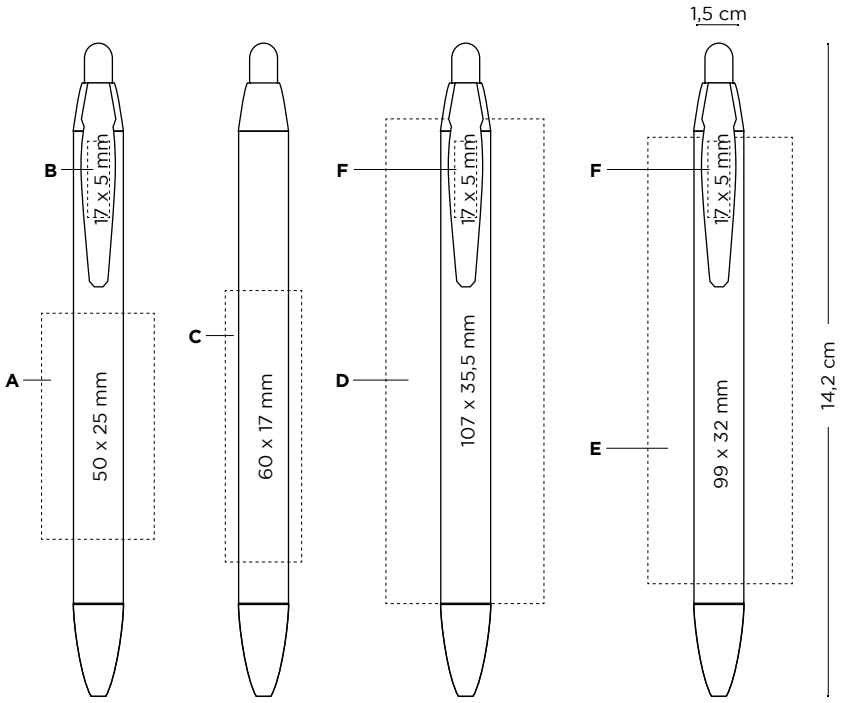

Price (DKK)

BIC® WIDE BODY™ 1080 / ecolutions® 1E80	250-499	500-999	1000-2499	2500-4999	5000-9999	10000-24999	25000-49999
SP	[illegible]	[illegible]	[illegible]	[illegible]	[illegible]	ⓘ	ⓘ
DG	-	[illegible]	[illegible]	[illegible]	[illegible]	ⓘ	ⓘ
1079							
SP	[illegible]	[illegible]	[illegible]	[illegible]	[illegible]	ⓘ	ⓘ
DG	-	[illegible]	[illegible]	[illegible]	[illegible]	ⓘ	ⓘ

Additional imprint charge per colour & position

SP	[illegible]	[illegible]	[illegible]	[illegible]	[illegible]	ⓘ	ⓘ

Prices include one imprint in one position according to specified technique.
ⓘ Price under request.

New optional special packaging:



ECO Sleeve / Plastic Pouch / Window Box

+ INFO pag. 288

External packaging:



250 ± 2,6 Kg

MADE IN SPAIN

BIC® WIDE BODY™ MINI DIGITAL
1893

BIC® WIDE BODY™ MINI CHROME DIGITAL
1896

A DG: full-colour (area for images)
B DG: full-colour (area for text)

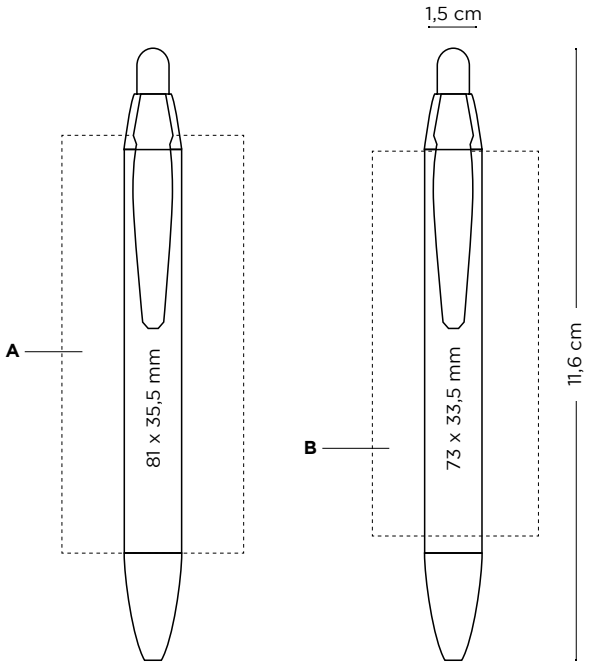

Price (DKK)

BIC® WIDE BODY™ MINI DIGITAL	500-999	1000-2499	2500-4999	5000-9999	10000-24999	25000-49999
1893						
DG	8,88	8,28	7,76	7,31	ⓘ	ⓘ
1896						
DG	15,37	14,32	13,58	12,53	ⓘ	ⓘ

Prices include digital imprint on barrel.
ⓘ Price under request.

New optional special packaging:



Plastic Pouch

External packaging:



250 ± 1,9 Kg

MADE IN SPAIN

48h

MANUFACTURED AND PRINTED IN BIC FACTORIES

Opaque - 1053



Iconic BIC® Boy is embossed

	07	02	01/03	01/05	01/07
Colour ink	●	●	●	●	●

100%

01/02 ●

Clear - 1053



51/07 ●



100%

51/02 ●

Soft grip, easy to handle

MOQ 250u.

Standard colours combination

Decoration:

BIC® ATLANTIS®
1053
A PD: max. 1 col.
B/C SP: max. 2 col.

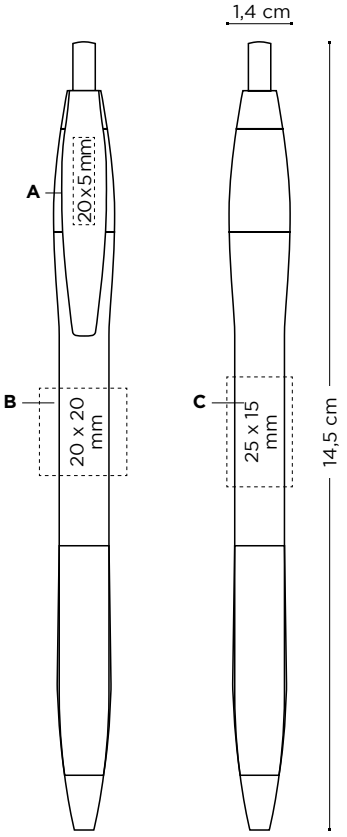

Price (DKK)

BIC® ATLANTIS® 1053	250-499	500-999	1000-2499	2500-4999	5000-9999	10000-24999	25000-49999
SP/PD	10,29	9,33	8,65	8,06	7,61	ⓘ	ⓘ
Additional imprint charge per colour & position							
SP/PD	1,19	0,97	0,97	0,97	0,90	ⓘ	ⓘ

Prices include one imprint in one position according to specified technique.
ⓘ Price under request.

Writing modes:

Ballpen



M

Printing techniques:



(SP) SCREEN PRINTING



(PD) PAD PRINTING

New optional special packaging:



ECO Sleeve / Plastic Pouch / Window Box

+ INFO pag. 288

External packaging:



250 ± 2,3 Kg

Easy Glide System®



4 COLOURS

Simple, inventive, reliable. Four different ink colours in one: blue, black, red, green. An icon that's always in fashion!




50
ans/years

britePix DIGITAL

New solution for full colour communication

BIC Graphic Europe the pioneer in digital printing





MANUFACTURED AND PRINTED IN BIC FACTORIES

RETRACTABLE MULTICOLOUR BALLPEN N°1 IN EUROPE **

**GFK Panel - Western Europe 9 - MAT June 2018 - Sales in Value & Volume

BIC 4 COLOURS BRITEPIX™ DIGITAL *New!*

4 Colours - 1100



01/01 | 01/07 | 02/02

4 Colours Fashion - 1102



01/01 | 01/24 | 01/84 | 02/02

4 Colours Sun - 1097



01/12

4 Colours Fine - 1109



01/10

Ink colour

4 COLOURS

48h*

RETRACTABLE MULTICOLOUR BALL PEN N°1 IN EUROPE**

MANUFACTURED AND PRINTED IN BIC FACTORIES

BIC® 4 COLOURS

Opaque - 1100

With Lanyard - 1101



New colours!

	01/01	01/07	02/02	01/03	01/05	01/02
Colour ink						

100%

8000m of writing lenght

*48h not available in Digital finishes
Available without lanyard

** Source: GFK Panel - Western Europe 9 – MAT June 2018 – Sales in Value & Volume

MOQ 250u.

Decoration:

BIC® 4 COLOURS
1100
A SP: max. 4 col.
B DG: Digital print (area for images)
C BP: full-colour

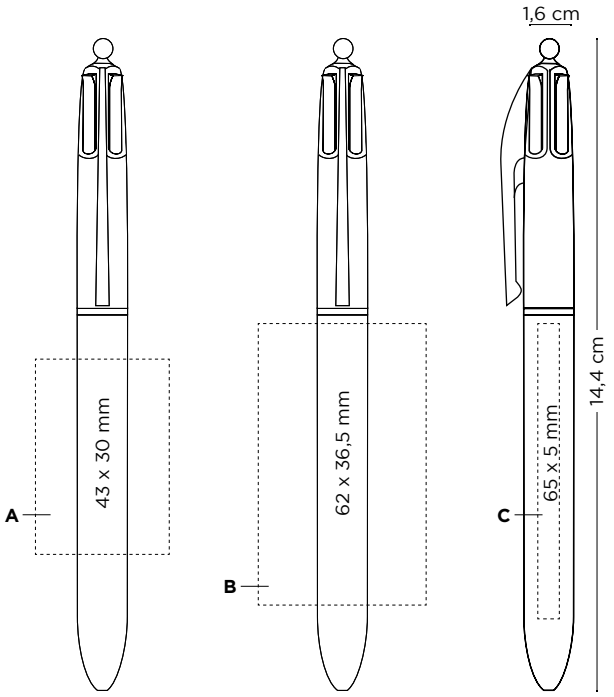

Price (DKK)

BIC® 4 COLOURS 1100	100-249	250-499	500-999	1000-2499	2500-4999	5000-9999	10000-24999	25000-49999
SP	-	22,16	20,07	18,58	17,38	16,34	15,22	14,02
DG	-	30,29	27,45	25,44	23,65	22,38	20,74	19,25
BP	29,32	23,87	21,63	20,14	18,80	17,75	16,41	15,29
1101 (lanyard)								
SP	-	25,14	22,75	21,04	19,77	18,58	17,46	16,19
DG	-	33,27	30,14	27,90	26,04	24,62	22,98	21,41
BP	32,90	26,86	24,32	22,60	21,19	19,99	18,65	17,46

Additional imprint charge per colour & position								
SP	-	1,19	0,97	0,97	0,97	0,90	0,82	0,82
BP	1,87	1,72	1,57	1,49	1,42	1,34	1,19	1,12
BP Texture	1,42	1,27	1,12	1,04	1,04	0,97	0,90	0,90

Prices include one imprint in one position according to specified technique.

Writing modes:

Ballpen



M

Printing techniques:



(SP) SCREEN PRINTING



(BP) britePix™

New optional special packaging:



ECO Sleeve / Plastic Pouch / Window Box

+ INFO pag. 288

External packaging:



250 ± 3,2 Kg

Check out the video

MADE IN FRANCE

4 COLOURS MINI

48h*

MANUFACTURED AND PRINTED IN BIC FACTORIES

BIC® 4 COLOURS MINI
Opaque - 1103
With Lanyard - 1104



01/04

Colour ink

01/01

100%

BIC® logo is embossed

MOQ 250u.

Decoration:

BIC® 4 COLOURS MINI
1103
D SP: max. 4 col.

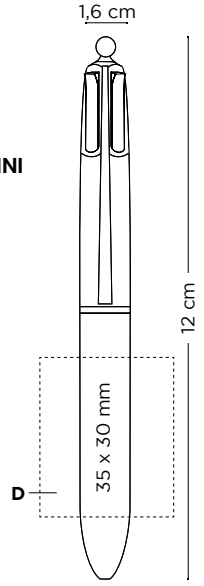

Price (DKK)

BIC® 4 COLOURS MINI	250-499	500-999	1000-2499	2500-4999	5000-9999	10000-24999	25000-49999
1103							
SP	23,57	21,34	19,84	18,50	17,46	16,79	16,11
1104 (lanyard)							
SP	26,71	24,17	22,45	21,04	19,84	19,10	18,43
Additional imprint charge per colour & position							
SP	1,19	0,97	0,97	0,97	0,90	0,82	0,82

Prices include 1 colour screenprint in one position.

Writing modes:

Ballpen

M

*48h not available in Digital finishes
Available without lanyard

Printing techniques:

(SP) SCREEN PRINTING

External packaging:

250 ± 2,7 Kg

48h*

MANUFACTURED AND PRINTED IN BIC FACTORIES

BIC® 4 COLOURS SUN
Opaque - 1097
With Lanyard - 1098



MOQ 250u.

Decoration:

BIC® 4 COLOURS SUN
1097
A SP: max. 4 col.
B DG: Digital print (area for images)
C BP: full-colour

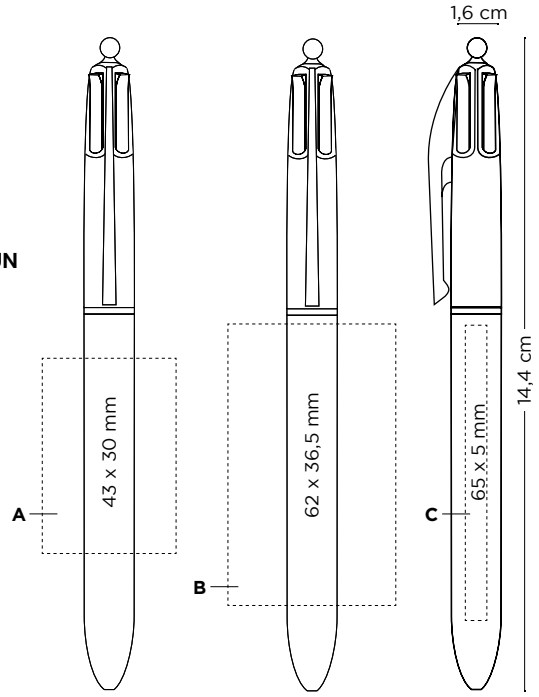

Price (DKK)

BIC® 4 COLOURS SUN	100-249	250-499	500-999	1000-2499	2500-4999	5000-9999	10000-24999	25000-49999
1097								
SP	-	22,16	20,07	18,58	17,38	16,34	15,22	14,02
DG	-	30,29	27,45	25,44	23,65	22,38	20,74	19,25
BP	29,32	23,87	21,63	20,14	18,80	17,75	16,41	15,29
1098 (lanyard)								
SP	-	25,14	22,75	21,04	19,77	18,58	17,46	16,19
DG	-	33,27	30,14	27,90	26,04	24,62	22,98	21,41
BP	32,90	26,86	24,32	22,60	21,19	19,99	18,65	17,46

Additional imprint charge per colour & position								
SP	-	1,19	0,97	0,97	0,97	0,90	0,82	0,82
BP	1,87	1,72	1,57	1,49	1,42	1,34	1,19	1,12
BP Texture	1,42	1,27	1,12	1,04	1,04	0,97	0,90	0,90

Prices include one imprint in one position according to specified technique.

Writing modes:

Ballpen

M

*48h not available in Digital finishes
Available without lanyard

Printing techniques:

(SP) SCREEN PRINTING

(BP) britePix™

New optional special packaging:



ECO Sleeve / Plastic Pouch / Window Box

+ INFO pag. 288

External packaging:



250 ± 3,2 Kg

MADE IN FRANCE



4 COLOURS FASHION

48h*

MANUFACTURED AND PRINTED IN BIC FACTORIES

Fashion inks!

BIC® 4 COLOURS FASHION
Opaque - 1102
With Lanyard - 1108



	01/01	01/24	01/84	02/02
Colour ink				

100%

*48h not available in Digital finishes
Available without lanyard

MOQ 250u.

Decoration:

BIC® 4 COLOURS FASHION
1102
A SP: max. 4 col.
B DG: Digital print (area for images)
C BP: full-colour

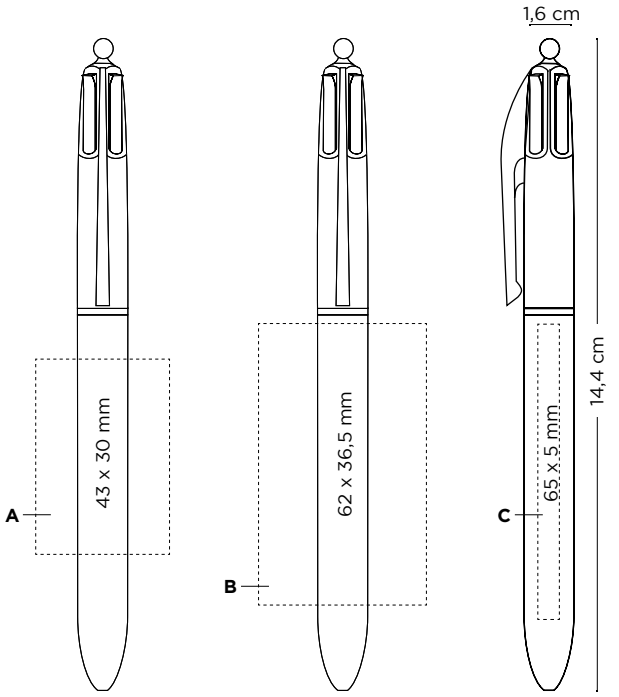

Price (DKK)

BIC® 4 COLOURS FASHION	100-249	250-499	500-999	1000-2499	2500-4999	5000-9999	10000-24999	25000-49999
1102								
SP	-	22,16	20,07	18,58	17,38	16,34	15,22	14,02
DG	-	30,29	27,45	25,44	23,65	22,38	20,74	19,25
BP	29,32	23,87	21,63	20,14	18,80	17,75	16,41	15,29
1108 (lanyard)								
SP	-	25,14	22,75	21,04	19,77	18,58	17,46	16,19
DG	-	33,27	30,14	27,90	26,04	24,62	22,98	21,41
BP	32,90	26,86	24,32	22,60	21,19	19,99	18,65	17,46
Additional imprint charge per colour & position								
SP	-	1,19	0,97	0,97	0,97	0,90	0,82	0,82
BP	1,87	1,72	1,57	1,49	1,42	1,34	1,19	1,12
BP Texture	1,42	1,27	1,12	1,04	1,04	0,97	0,90	0,90

Prices include one imprint in one position according to specified technique.

Writing modes:

Ballpen

M

Printing techniques:

(SP) SCREEN PRINTING

(BP) britePix™

New optional special packaging:

ECO Sleeve / Plastic Pouch / Window Box

+ INFO pag. 288

External packaging:

250 ± 3,2 Kg

MADE IN FRANCE

BIC® 4 COLOURS SHINE
Opaque - 1106
With Lanyard - 1107



MOQ 250u.

Decoration:

BIC® 4 COLOURS SHINE
1106
A SP: max. 2 col.
B LE
C LE
D LE 360º

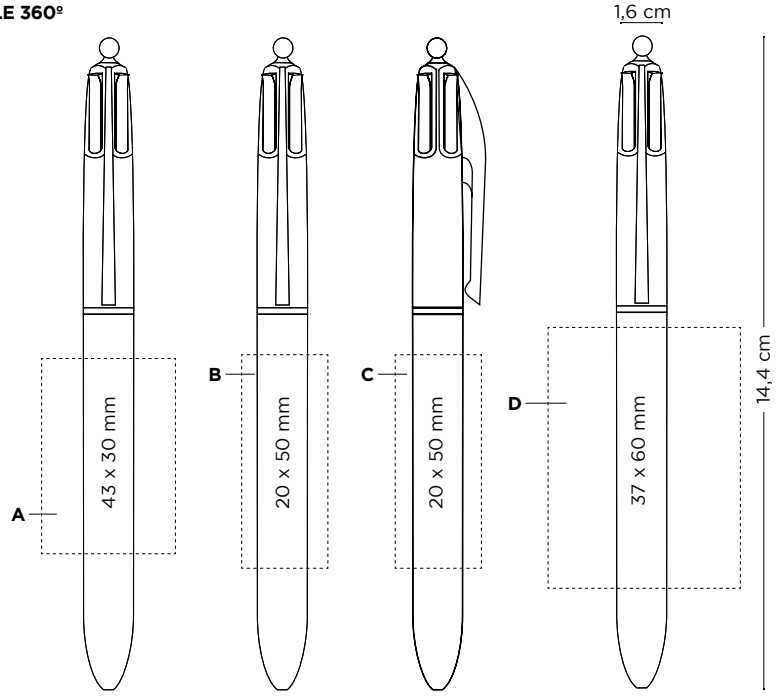

Price (DKK)

BIC® 4 COLOURS SHINE	250-499	500-999	1000-2499	2500-4999	5000-9999	10000-24999	25000-49999
1106							
SP	25,36	22,83	21,19	19,84	18,58	17,31	16,04
LE	31,11	28,05	26,04	24,25	22,90	21,19	19,69
LE 360º	35,36	31,78	29,62	27,60	25,96	24,02	23,20
1107 (lanyard)							
SP	28,50	25,66	23,80	22,38	20,96	19,62	18,35
LE	34,24	30,88	28,65	26,78	25,29	23,57	22,01
LE 360º	38,49	34,69	32,23	30,14	28,35	26,41	25,51
Additional imprint charge per colour & position							
SP	1,19	0,97	0,97	0,97	0,90	0,82	0,82

Prices include one imprint in one position according to specified technique.
ⓘ Price under request.

Writing modes:

Ballpen
M

Printing techniques:

(SP) SCREEN PRINTING
(LE) LASER

New optional special packaging:



ECO Sleeve / Plastic Pouch / Window Box

+ INFO pag. 288

External packaging:



250 ± 3,2 Kg

MADE IN FRANCE

4 COLOURS FINE

48h*

MANUFACTURED AND PRINTED IN BIC FACTORIES

BIC® 4 COLOURS FINE
Opaque - 1109
With Lanyard - 1111



MOQ 250u.

Decoration:

BIC® 4 COLOURS FINE
1109
A SP: max. 4 col.
B DG: Digital print
C BP: full-colour

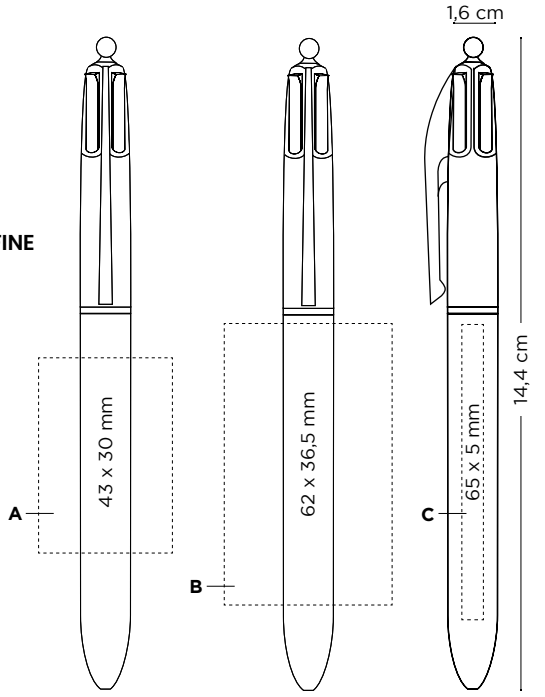

Price (DKK)

BIC® 4 COLOURS FINE	100-249	250-499	500-999	1000-2499	2500-4999	5000-9999	10000-24999	25000-49999
1109								
SP	-	22,16	20,07	18,58	17,38	16,34	15,22	14,02
DG	-	30,29	27,45	25,44	23,65	22,38	20,74	19,25
BP	29,32	23,87	21,63	20,14	18,80	17,75	16,41	15,29
1111 (lanyard)								
SP	-	25,14	22,75	21,04	19,77	18,58	17,46	16,19
DG	-	33,27	30,14	27,90	26,04	24,62	22,98	21,41
BP	32,90	26,86	24,32	22,60	21,19	19,99	18,65	17,46
Additional imprint charge per colour & position								
SP	-	1,19	0,97	0,97	0,97	0,90	0,82	0,82
BP	1,87	1,72	1,57	1,49	1,42	1,34	1,19	1,12
BP Texture	1,42	1,27	1,12	1,04	1,04	0,97	0,90	0,90

Prices include one imprint in one position according to specified technique.

Writing modes:

Ballpen

F

*48h not available in Digital finishes
Available without lanyard

Printing techniques:

(SP) SCREEN PRINTING

(BP) britePix™

New optional special packaging:



ECO Sleeve / Plastic Pouch / Window Box

+ INFO pag. 288

External packaging:



250 ± 3,2 Kg

MADE IN FRANCE

48h*

MANUFACTURED AND PRINTED IN BIC FACTORIES

BIC® 4 COLOURS FLUO
Opaque - 1114
With Lanyard - 1116



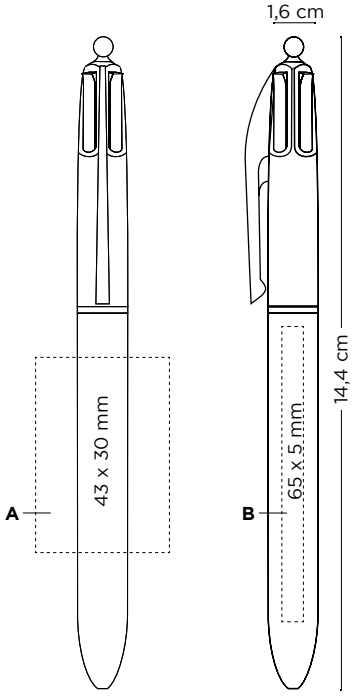

MOQ 250u.

Decoration:

BIC® 4 COLOURS FLUO
1114
A SP: max. 4 col.
B BP: full-colour

Price (DKK)

BIC® 4 COLOURS FLUO	100-249	250-499	500-999	1000-2499	2500-4999	5000-9999	10000-24999	25000-49999
1114								
SP	-	23,95	21,63	20,07	18,72	17,75	16,34	15,29
BP	31,56	25,74	23,28	21,56	20,22	19,10	17,68	16,41
1116 (lanyard)								
SP	-	27,15	24,54	22,68	21,26	20,14	18,72	17,61
BP	35,14	28,87	26,11	24,17	22,75	21,48	19,99	18,72
Additional imprint charge per colour & position								
SP	-	1,19	0,97	0,97	0,97	0,90	0,82	0,82
BP	1,87	1,72	1,57	1,49	1,42	1,34	1,19	1,12
BP Texture	1,42	1,27	1,12	1,04	1,04	0,97	0,90	0,90

Prices include one imprint in one position according to specified technique.

Writing modes:

Ballpen

B

*48h not available in Digital finishes
Available without lanyard

Printing techniques:

(SP) SCREEN PRINTING

(BP) britePix™

New optional special packaging:



ECO Sleeve / Plastic Pouch / Window Box

+ INFO pag. 288

External packaging:



250 ± 3,2 Kg

MADE IN FRANCE

4 COLOURS STYLUS

48h

MANUFACTURED AND PRINTED IN BIC FACTORIES

BIC® 4 COLOURS STYLUS
Opaque - 1112

Soft pad for touchscreen!



02/02

Colour ink

100%

02/02

MOQ 250u.

Decoration:

BIC® 4 COLOURS STYLUS
1112
A SP: max. 1 col.

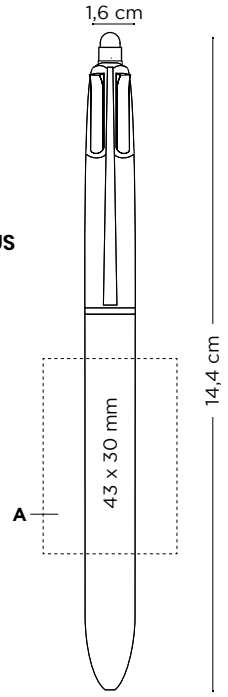

Price (DKK)

BIC® 4 COLOURS STYLUS 1112	250-499	500-999	1000-2499	2500-4999	5000-9999	10000-24999	25000-49999
SP	26,33	23,80	22,08	20,66	19,47	18,43	17,46

Prices include 1 colour screenprint in one position.

Writing modes:

Ballpen

M

Printing techniques:

(SP) SCREEN PRINTING

New optional special packaging:

Plastic Pouch

+ INFO pag. 288

External packaging:

250 ± 3,2 Kg



BIC® 4 COLOURS 3+1HB
Opaque - 1099



01/06

Colour ink

100%

01/06



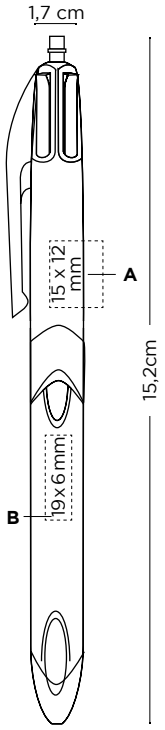

MOQ 250u.

Decoration:

BIC® 4 COLOURS 3+1HB
1099
A/B LE

Price (DKK)

BIC® 4 COLOURS 3+1HB 1099	250-499	500-999	1000-2499	2500-4999	5000-9999	10000-24999	25000-49999
LE	33,35	30,06	27,98	26,04	24,62	23,65	22,83
Additional imprint charge per imprint & position							
LE	9,03	8,13	7,16	7,16	7,16	7,16	7,16

Price includes 1 laser engraving in 1 position.

Writing modes:

Ballpen &
Mechanical pencil

M-MP
Ø0,7mm

Printing techniques:

HD
(LE)
LASER

New optional special packaging:



Plastic Pouch

+ INFO pag. 288

External packaging:



250 ± 3,5 Kg

Check out the video



METAL PRO

Metal accents, modern design with a large selection of colors and finishes. Maximum writing comfort, large German metal refill.



New!

Soft - 1290



	01	10	03	05	04	08	02
Colour ink	●	●	●	●	●	●	●

Polished - 1290



	01	10	03	05	04	08	02
Colour ink	●	●	●	●	●	●	●

New!

Matt - 1290



	01	10	03	05	04	08	02
Colour ink	●	●	●	●	●	●	●

MOQ 50u.

Decoration:

BIC® METAL PRO
1290
A SP: max. 2 col.
(Not available in soft finish)
B LE/SP: max. 1 col.
C LE 360º

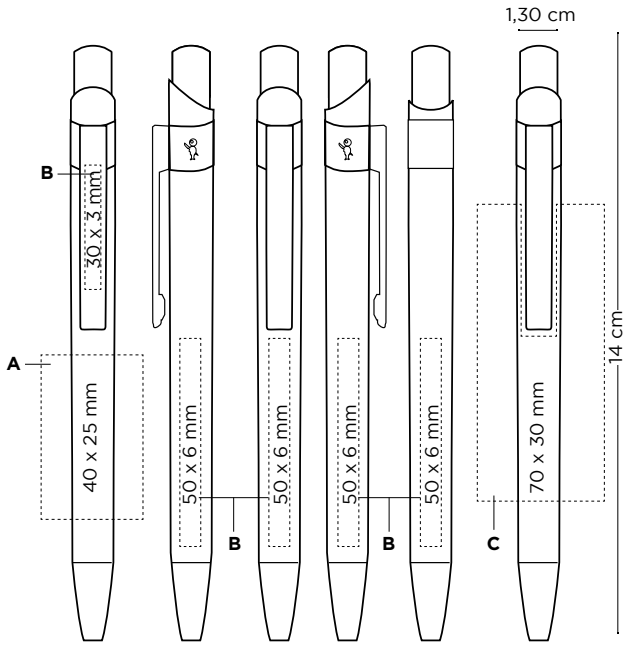

Price (DKK)

BIC® METAL PRO 1290	50-99	100-249	250-499	500-999	1000-2499	2500-4999	5000-9999
SP	32,45	31,33	30,14	28,94	27,45	26,41	25,44
LE	41,03	38,42	36,70	34,99	33,05	32,00	31,03
LE 360º (MOQ 100u.)	-	46,48	44,01	41,55	38,79	37,75	36,78

Additional imprint charge per colour & position							
SP	3,21	2,98	2,61	2,24	1,57	1,57	1,57
LE	11,79	10,07	9,18	8,28	7,16	ⓘ	ⓘ

Prices include one imprint in one position according to specified technique.
ⓘ Price under request.

Writing modes:

Ballpen



M

Printing techniques:



(SP)
SCREEN
PRINTING



(LE)
LASER

New optional special packaging:



ECO Sleeve / Plastic Pouch / Window Box

+ INFO pag. 288

External packaging:



150 ± 2,5 Kg

MADE IN GERMANY

GRIP ROLLER

Enjoy a smooth writing experience. Glide across the paper easily without smudging thanks to the quick-drying ink, ideal for both left and right-handed people.





GRIP ROLLER

MANUFACTURED AND PRINTED IN BIC FACTORIES

MEDIUM WRITING 0,7 mm

High quality medium point liquid ink roller pen for smooth and fluid writing

BIC® GRIP ROLLER
1187



01/35	12/35	10/35	03/35	08/35	14/35	59/35	24/35	07/35	06/35	27/35	02/35
♦	♦	♦	♦	♦	♦	♦	♦	♦	♦	♦	♦

Colour ink



MOQ 250u.

Decoration:

BIC® GRIP ROLLER
1187
A/B SP: max. 3 col.

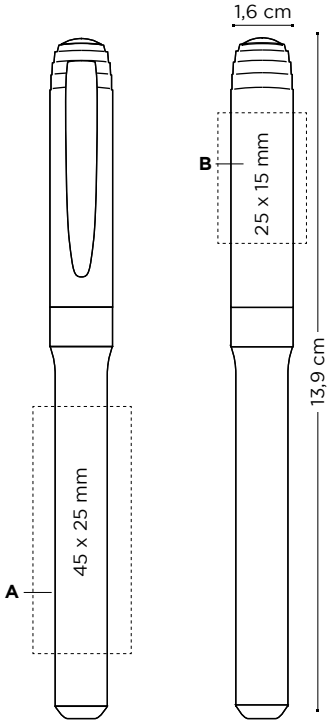

Price (DKK)

BIC® GRIP ROLLER 1187	250-499	500-999	1000-2499	2500-4999	5000-9999	10000-24999	25000-49999
SP	12,53	11,26	10,52	9,77	9,18	ⓘ	ⓘ
Additional imprint charge per colour & position							
SP	1,19	0,97	0,97	0,97	0,90	ⓘ	ⓘ

Prices include 1 colour screenprint in one position.
ⓘ Price under request.

Writing modes:

Roller



R
Ø0,7mm

Printing techniques:



(SP)
SCREEN
PRINTING

New optional special packaging:



ECO Sleeve / Plastic Pouch / Window Box / Marking Set

+ INFO pag. 288 & 289

External packaging:



250 ± 3 Kg



XS FINESTYLE

48h*

MANUFACTURED AND PRINTED IN BIC FACTORIES

New Colour! New Colour! New Colour!

Opaque - 1851

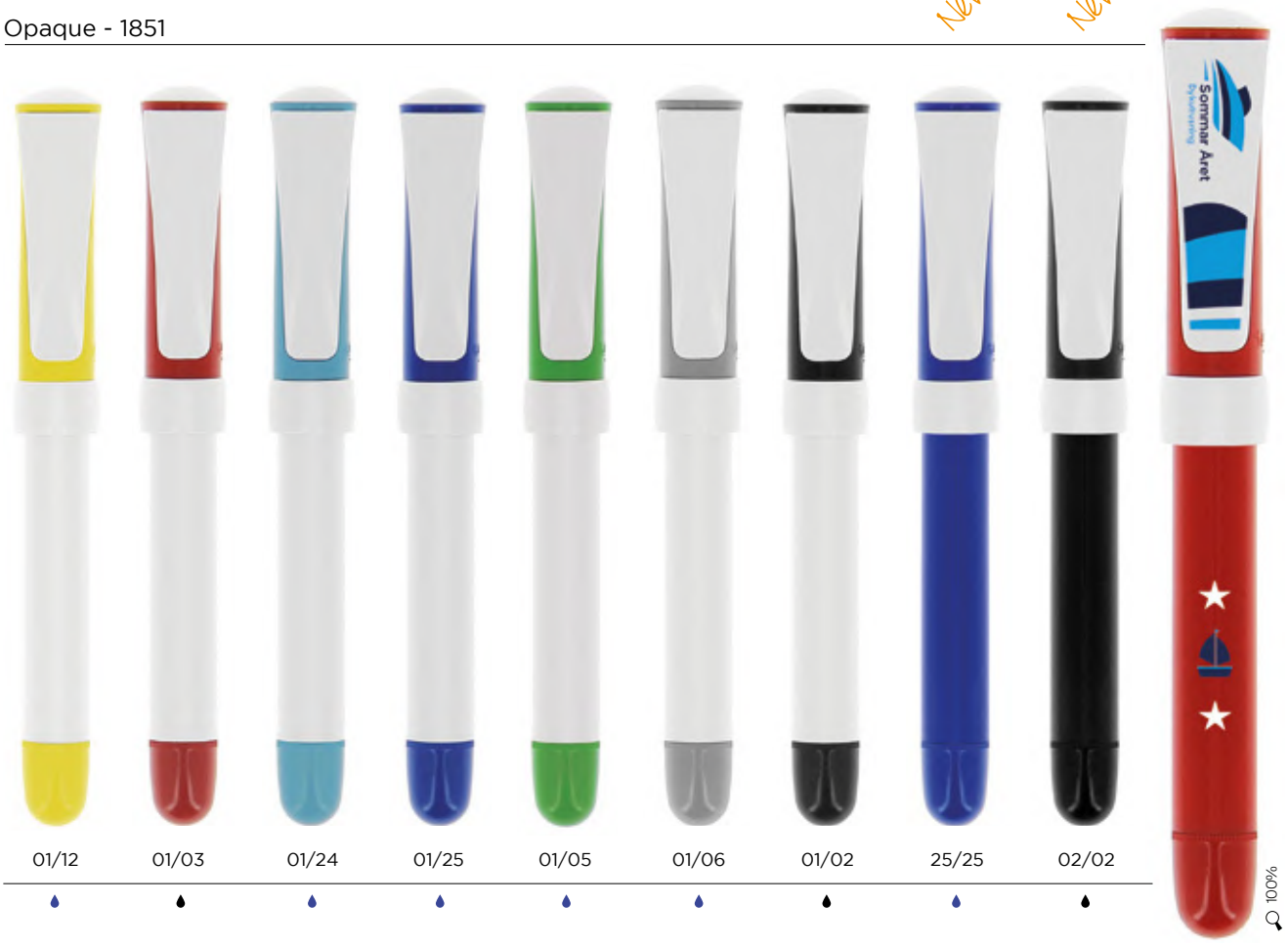

	01/12	01/03	01/24	01/25	01/05	01/06	01/02	25/25	02/02	03/03
Colour ink										

100%

*48h not available for britePix™ decoration

Opaque /Clear - 1851



01/89

MOQ 250u.

Decoration:

BIC® XS FINESTYLE
1851
A PD: max 2 col.
B SP: max 2 col.
C BP: full-colour

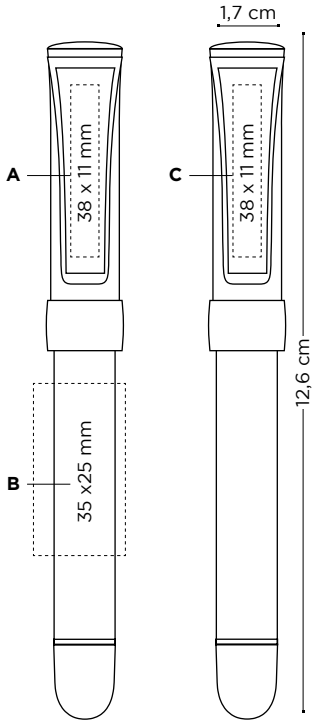

Price (DKK)

BIC® XS FINESTYLE 1851	250-499	500-999	1000-2499	2500-4999	5000-9999	10000-24999	25000-49999
SP/PD	12,76	11,64	10,89	10,15	9,40	ⓘ	ⓘ
BP	14,47	13,20	12,38	11,56	10,74	ⓘ	ⓘ
Additional imprint charge per colour & position							
SP/PD	1,19	0,97	0,97	0,97	0,90	ⓘ	ⓘ
BP Texture	1,27	1,12	1,04	1,04	0,97	ⓘ	ⓘ

Prices include one imprint in one position according to specified technique.
ⓘ Price under request.

Exact colour match:

≥ 10.000 units

Writing modes:

Finestyle

FS
Ø0,7mm

Printing techniques:

(SP) SCREEN PRINTING

(PD) PAD PRINTING

(BP) britePix™

New optional special packaging:



ECO Sleeve / Plastic Pouch

+ INFO pag. 288

External packaging:



250 ± 2,8 Kg

MADE IN SPAIN

GEL PENS

Live the smooth writing with the BIC® gel ink pens. Comfort meets superior handling with a rubber grip, easy to grab and feel even more comfortable while writing.





MOQ 250u.

Decoration:

BIC® ATLANTIS® GEL
1062
A PD: right, left
or rear clip max 1 col.

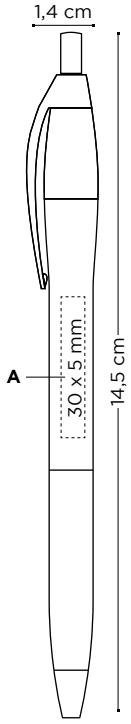

Price (DKK)

BIC® ATLANTIS® GEL 1062	250-499	500-999	1000-2499	2500-4999	5000-9999	10000-24999	25000-49999
PD	11,49	10,37	9,62	8,95	8,43	ⓘ	ⓘ
Additional imprint charge per position							
PD	1,19	0,97	0,97	0,97	0,90	ⓘ	ⓘ

Prices include 1 colour padprint in one position.
ⓘ Price under request.

Writing modes:

Gel

G
Ø0,7mm

until stock lasts.

Printing techniques:

(PD)
PAD PRINTING

New optional special packaging:



ECO Sleeve / Plastic Pouch / Window Box

+ INFO pag. 288

External packaging:



250 ± 3 Kg

GEL-OCITY® ILLUSION



MANUFACTURED AND PRINTED IN BIC FACTORIES

Opaque - 1136



	03	05	04	02
Colour ink	●	●	●	●

Comes in an individual cardboard!



Customise it from 500 units New!





Erasable ink using thermosensitive technology: write, erase and rewrite repeatedly

Available only in:
EU (including Norway, Switzerland and Turkey)

MOQ 250u.

Decoration:

BIC® GEL-OCITY® ILLUSION
1136
A SP: max. 1 col.
B DG: 4-colour process

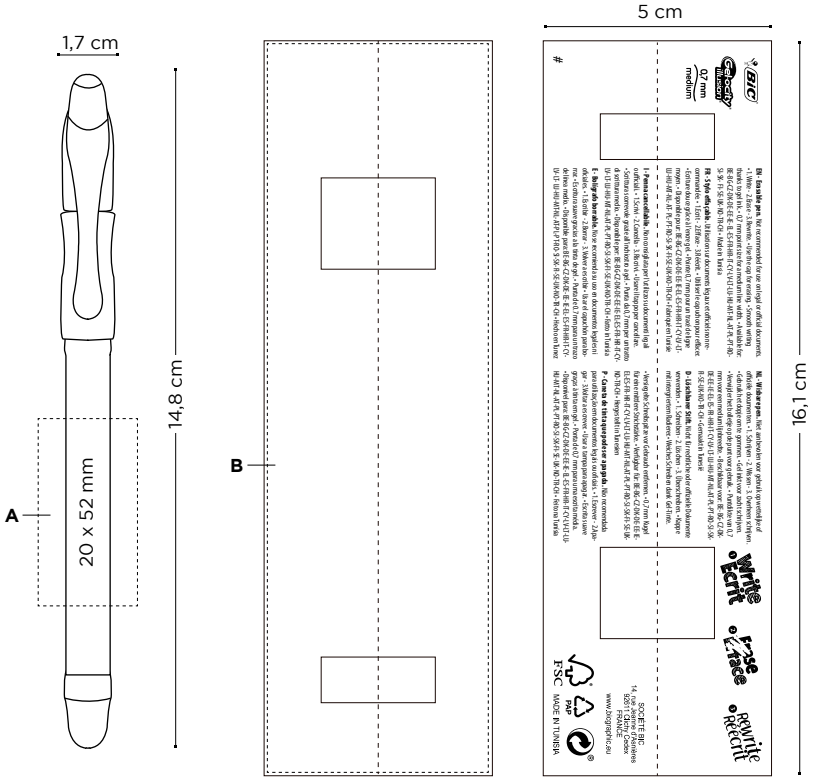

Price (DKK)

BIC® GEL-OCITY® ILLUSION 1136	250-499	500-999	1000-2499	2500-4999	5000-9999	10000-24999	25000-49999
SP	19,17	17,46	16,26	15,14	14,25	ⓘ	ⓘ
Additional imprint charge per colour & position							
DG (Cardboard)	-	11,26	7,61	6,04	3,51	1,87	1,64

Prices include one imprint in one position according to specified technique.
Additional charge for customer logo printed on the cardboard (from 500 u.)
ⓘ Price under request.

Writing modes:

Gel erasable



G
Ø0,7mm

Printing techniques:



(SP)
SCREEN
PRINTING

External packaging:



500 ± 5,87 Kg

INTENSITY® GEL CLIC

48h

MANUFACTURED AND PRINTED IN BIC FACTORIES

Opaque - 1196



Iconic BIC® Boy is embossed

Colour ink	01	02
	●	●

100%

Clear - 1196



92	87	88	86	93
●	●	●	●	●

100%

MOQ 250u.

Decoration:

BIC® INTENSITY® GEL CLIC
1196
A SP: max. 2 col.
B SP: max. 4 col.

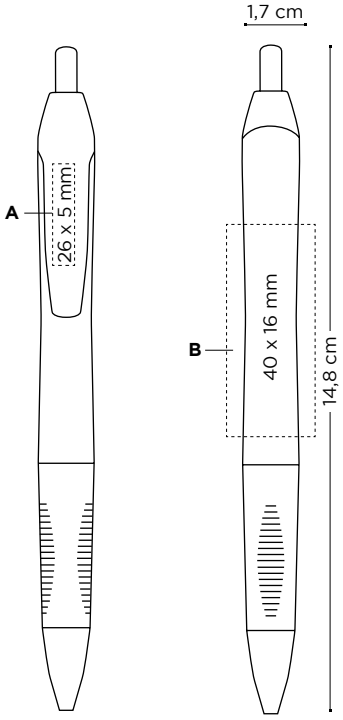

Price (DKK)

BIC® INTENSITY® GEL CLIC 1196	250-499	500-999	1000-2499	2500-4999	5000-9999	10000-24999	25000-49999
SP	19,92	18,05	16,71	15,59	14,70	ⓘ	ⓘ
Additional imprint charge per colour & position							
SP	1,19	0,97	0,97	0,97	0,90	ⓘ	ⓘ

Prices include 1 colour screenprint in one position.
ⓘ Price under request.

Writing modes:

Gel



G
Ø0,7mm

Printing techniques:



(SP)
SCREEN
PRINTING

New optional special packaging:



Plastic Pouch

+ INFO pag. 288

External packaging:



250 ± 3,7 Kg

BRITE LINER® GRIP

Highlight your message with precision and control thanks to the textured rubberised grip.




BIC
BIC
BIC

BRITE LINER® GRIP

48h

WILL NOT DRY OUT 24h

MANUFACTURED AND PRINTED IN BIC FACTORIES

New Colour!* New Colour!*

1192



12	10	14	24	59	85	83	3G	8D	84	3H
Colour ink										

100%

*New colours available from April

MOQ 250u.

Decoration:

BIC® BRITE LINER® GRIP
1192
A/B SP: max. 3 col.

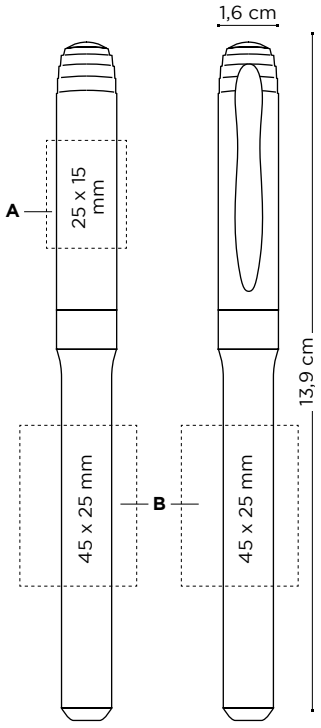

Price (DKK)

BIC® BRITE LINER® GRIP 1192	250-499	500-999	1000-2499	2500-4999	5000-9999	10000-24999	25000-49999
SP	11,19	10,37	9,47	8,80	8,28	ⓘ	ⓘ
Additional imprint charge per colour & position							
SP	1,19	0,97	0,97	0,97	0,90	ⓘ	ⓘ

Prices include 1 colour screenprint in one position.
ⓘ Price under request.

Now you can have it on set!

Writing modes:

Highlighter



HL

Printing techniques:



(SP)
SCREEN
PRINTING

New optional special packaging:



Marking Set

+ INFO pag. 289

External packaging:



250 ± 2,8 Kg



MARKERS

BIC® markers offer you products specifically designed to write in highly visible way and mark on surfaces or material that other writing instruments cannot mark on. Make your ideas visible and express yourself whatever the surface with BIC® Markers.



WHITE BOARD MARKER FINE

48h

RESISTANT TIP

LOW ODOUR

MANUFACTURED AND PRINTED IN BIC FACTORIES

1651



01/03 01/04 01/02

Colour ink

01/05

MOQ 500u.

Decoration:

BIC® Velleda® WHITE BOARD MARKER FINE
1651
A SP: max. 1 col.

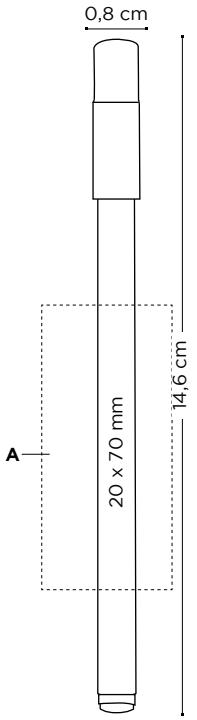

Price (DKK)

BIC® Velleda® WHITE BOARD MARKER FINE 1651	250-499	500-999	1000-2499	2500-4999	5000-9999	10000-24999	25000-49999
SP	-	4,03	3,66	3,43	3,21	2,98	2,76

Prices include 1 colour screenprint in one position.

Now you can have it on set!

Writing modes:

Marker

MK

Printing techniques:

(SP) SCREEN PRINTING

New optional special packaging:



Marking Set

+ INFO pag. 289

External packaging:



500 ± 3,2 Kg

MADE IN FRANCE

WHITE BOARD MARKER GRIP

1213



MOQ 250u.

Decoration:

BIC® Velleda® WHITE BOARD MARKER GRIP
1213
A/B SP: max. 3 col.

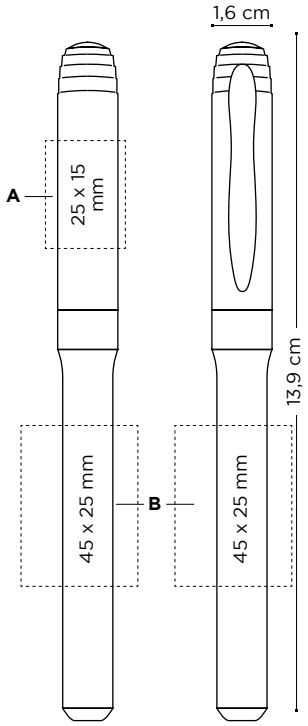

Price (DKK)

BIC® Velleda® WHITE BOARD MARKER GRIP 1213	250-499	500-999	1000-2499	2500-4999	5000-9999	10000-24999	25000-49999
SP	11,04	9,92	9,18	8,58	8,06	ⓘ	ⓘ
Additional imprint charge per colour & position							
SP	1,19	0,97	0,97	0,97	0,90	ⓘ	ⓘ

Prices include 1 colour screenprint in one position.
ⓘ Price under request.

Writing modes:

White board marker

MK

Printing techniques:

(SP) SCREEN PRINTING

Now you can have it on set!

New optional special packaging:



Marking Set

+ INFO pag. 289

External packaging:



250 ± 2,7 Kg

MARK-IT PERMANENT MARKER

48h

1214



01/03 01/05 01/02

Colour ink

01/04

MOQ 250u.

Decoration:

BIC® MARK-IT PERMANENT MARKER
1214
A/B SP: max. 3 col.

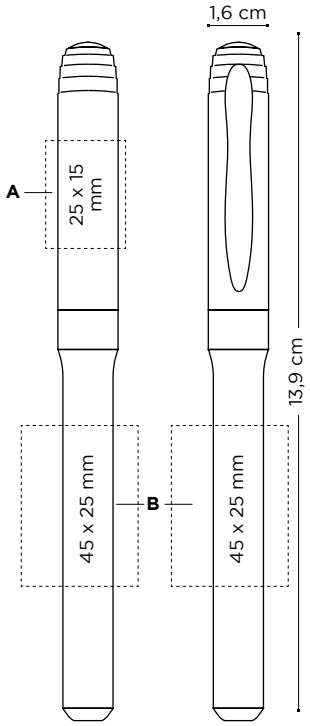

Price (DKK)

BIC® MARK-IT PERMANENT MARKER 1214	250-499	500-999	1000-2499	2500-4999	5000-9999	10000-24999	25000-49999
SP	10,82	9,70	9,03	8,43	7,91	ⓘ	ⓘ
Additional imprint charge per colour & position							
SP	1,19	0,97	0,97	0,97	0,90	ⓘ	ⓘ

Prices include 1 colour screenprint in one position.
ⓘ Price under request.

Writing modes:

Marker

MK

Printing techniques:

(SP) SCREEN PRINTING

New optional special packaging:

Now you can have it on set!

Marking Set

+ INFO pag. 289

External packaging:

250 ± 2,8 Kg

MADE FROM 51% OF RECYCLED MATERIAL* &
100% RECYCLABLE

MANUFACTURED AND PRINTED IN BIC FACTORIES

Add the Möbius loop to your artwork at no additional charge. Please specify "Print the Möbius loop" on your order. (Möbius loop imprint defaults to left-hand hand corner.)

1210



02

Colour ink

100%

02

MOQ 250u.

Decoration:

BIC® PERMANENT MARKER ecolutions®
1210
A SP: max. 1 col.

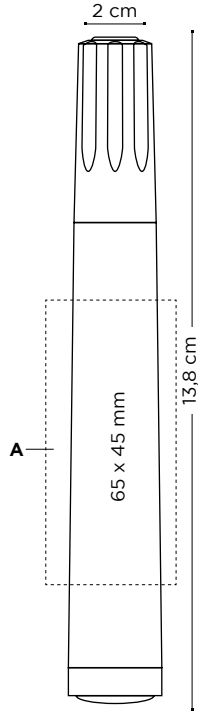

ecolutions® **Made with 51% recycled material.**

Price (DKK)

BIC® PERMANENT MARKER ecolutions®	250-499	500-999	1000-2499	2500-4999	5000-9999	10000-24999	25000-49999
1210							
SP	[illegible]	[illegible]	[illegible]	[illegible]	[illegible]	ⓘ	ⓘ

Prices include 1 colour screenprint in one position.
ⓘ Price under request.

Writing modes:

Marker

MK

Printing techniques:

(SP) SCREEN PRINTING

External packaging:

250 ± 2,6 Kg

MADE IN FRANCE

*The percentage is calculated on total weight of barrel

BIC® MATIC®

Stay sharp with this first-class mechanical pencil! It is solid and resistant, never needs sharpening and writes smoother and darker than ever!

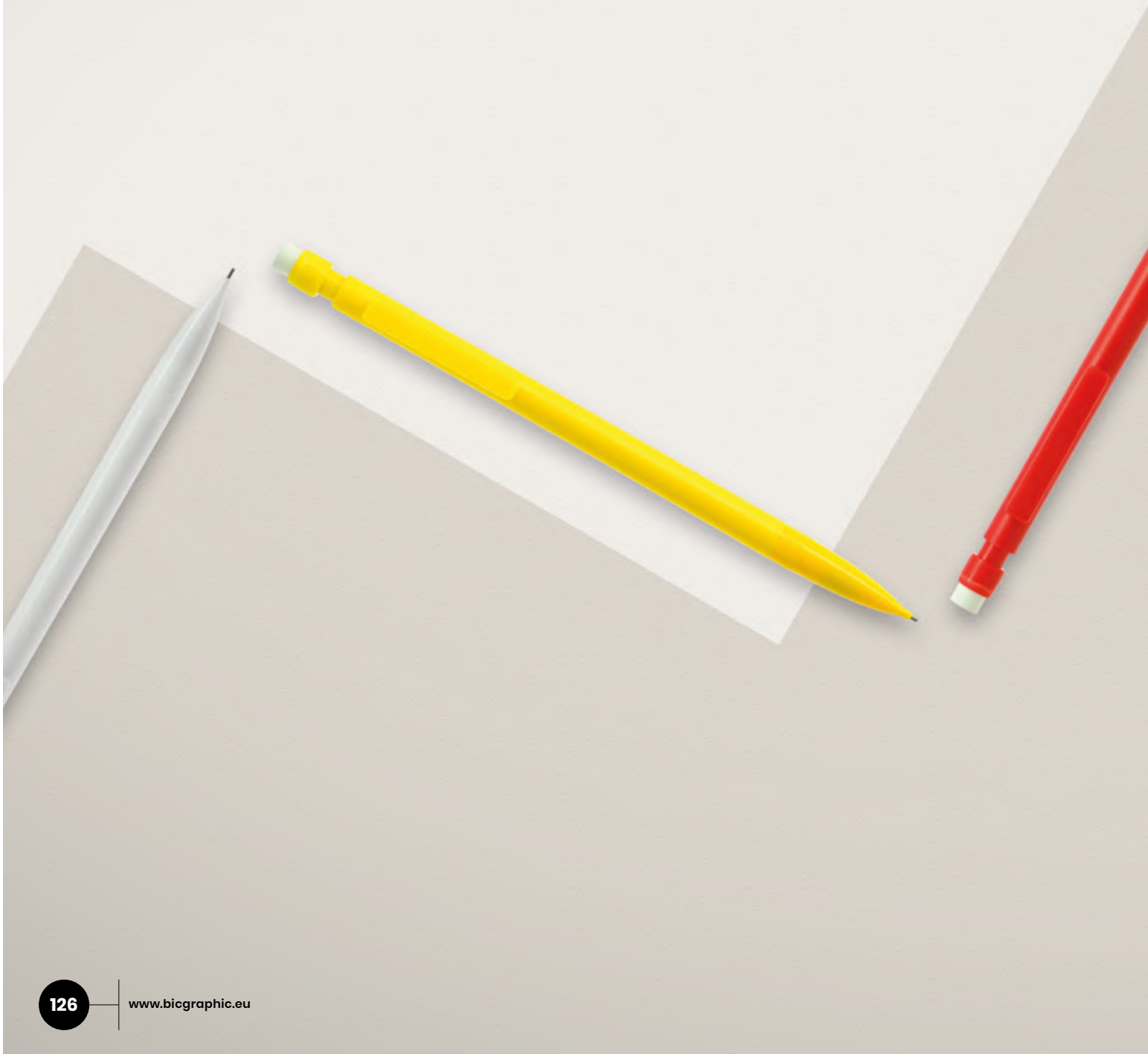



48h

easy to use & erase • utilisation et gommage facile

x3 leads / mines / minas 9cm

smoother & darker writing • Encre plus lisse et plus foncée

MANUFACTURED AND PRINTED IN BIC FACTORIES

BIC® MATIC®
Opaque - 1120



01/12 01/03 01/05 01/04 01/02

100%

MADE FROM 65% OF RECYCLED MATERIAL* & **100% RECYCLABLE**

BIC® MATIC®
ecolutions®
Opaque - 1E40



01/01 12/12 03/03 59/8C 04/8C 07/07 06/8C 02/02

100%

*The percentage is calculated on total weight of the product

Add the Möbius loop to your artwork at no additional charge. Please specify it on your order. (Möbius loop imprint defaults to left-hand hand corner.)

48h

BIC® MATIC® QUARTZ
Opaque - 1121



51/01 51/03



100%

51/04

BIC® MATIC® QUARTZ METALLIC



51/07 51/18

BIC® MATIC® GRIP
Opaque - 1122



01/04 01/02



100%

02/02

BIC® MATIC® GRIP METALLIC



1D/02*

*Until stock lasts

MOQ 500u.

Decoration:

BIC® MATIC®
1120
ecolutions® 1E40

BIC® MATIC® QUARTZ & METALLIC
1121

A SP: max. 1 col. (not available for BIC® Matic® Quartz)
B/C SP: max. 2 col.

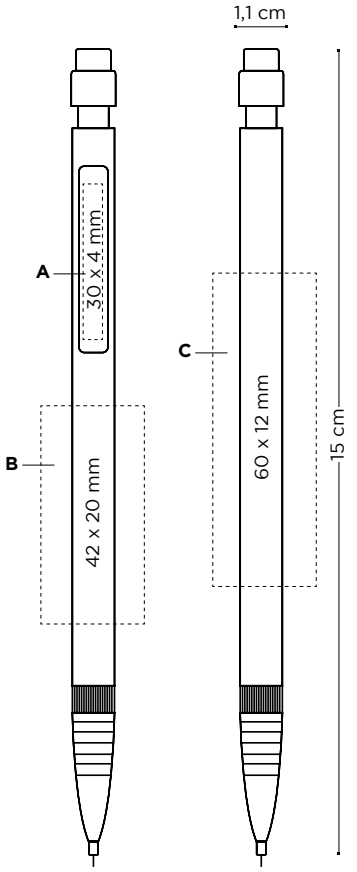

ecolutions® version & STD at the same price!

Price (DKK)

BIC® MATIC® QUARTZ & METALLIC 1120/ecolutions® 1E40	500-999	1000-2499	2500-4999	5000-9999	10000-24999	25000-49999
SP	[illegible]	[illegible]	[illegible]	[illegible]	[illegible]	[illegible]
1121						
SP	[illegible]	[illegible]	[illegible]	[illegible]	[illegible]	[illegible]
Additional imprint charge per colour & position						
SP	[illegible]	[illegible]	[illegible]	[illegible]	[illegible]	[illegible]

Prices include 1 colour screenprint in one position.

BIC® MATIC® GRIP & METALLIC
1122
A SP: max. 1 col.
B/C SP: max. 2 col.

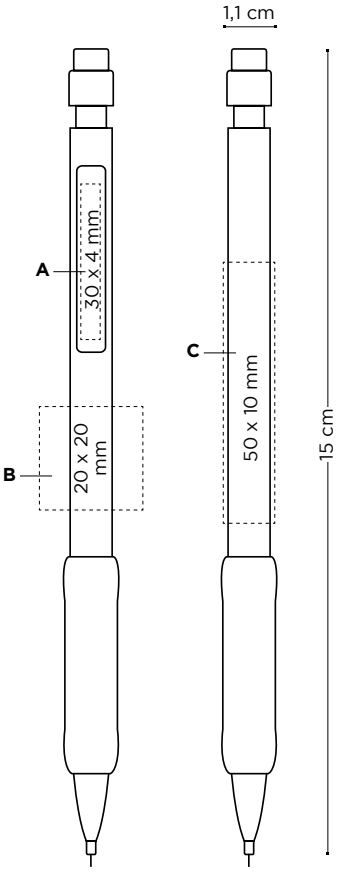

Price (DKK)

BIC® MATIC® GRIP & METALLIC 1122	500-999	1000-2499	2500-4999	5000-9999	10000-24999	25000-49999
SP	6,79	6,34	5,97	5,52	5,15	4,77
Additional imprint charge per colour & position						
SP	0,97	0,97	0,97	0,90	0,82	0,82

Prices include 1 colour screenprint in one position.

Writing modes:

Mechanical pencil



MP
Ø0,7mm

Printing techniques:



(SP)
SCREEN PRINTING

New optional special packaging:



ECO Sleeve / Plastic Pouch

+ INFO pag. 288

External packaging:



500 ± 3,1 Kg

MADE IN FRANCE

BIC® EVOLUTION® ecolutions®

Wood-free pencil made with recycled synthetic resin material, that will not splinter in the event of breaking. Ultra-resistant HB graphite lead and excellent erasability!



48h

SHOCK RESISTANT – RESISTE AUX CHOCS

WOOD FREE – NO SPLINTER

1150

MADE FROM 50% OF RECYCLED MATERIAL* & **100% RECYCLABLE**

1151

MADE FROM 46% OF RECYCLED MATERIAL* & **100% RECYCLABLE**

MANUFACTURED AND PRINTED IN BIC FACTORIES

Graphite Pencil Cut End
1150

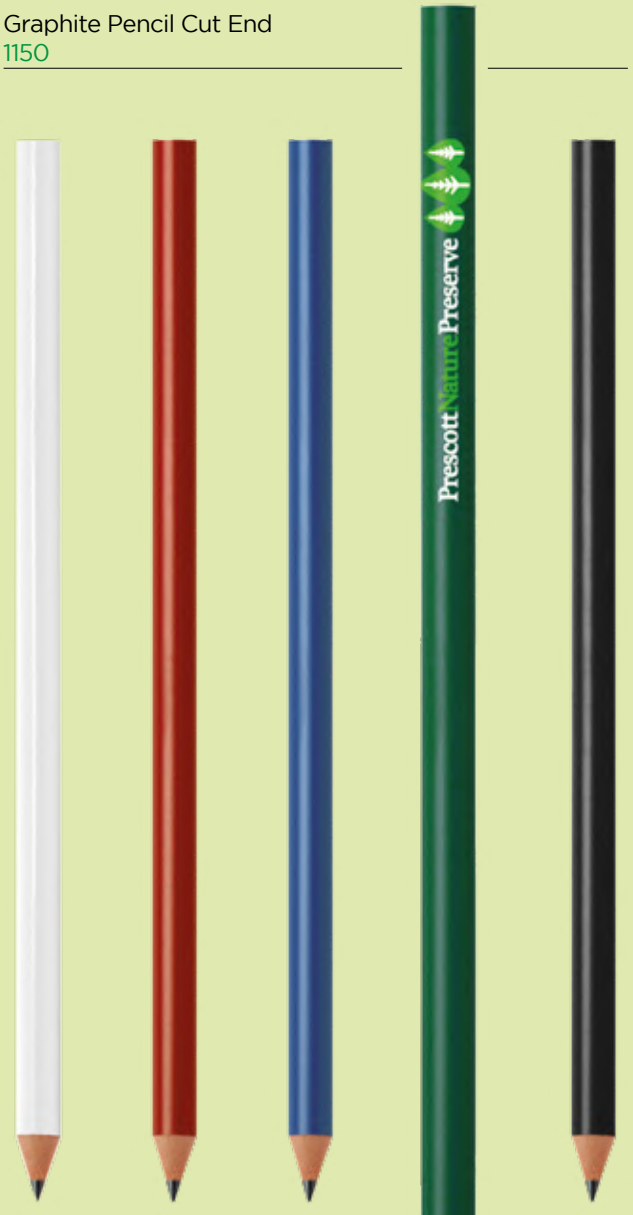

01 03 04 02

20

100%

PROTECTIVE SHEATH

Graphite Pencil With Eraser
1151

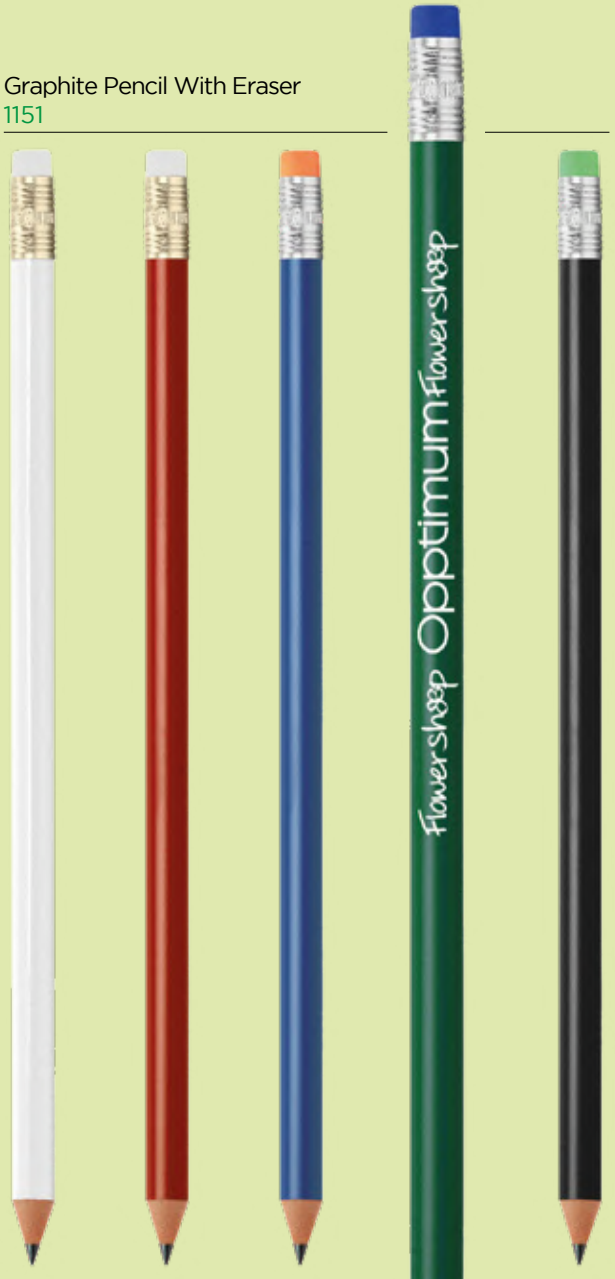

01 03 04 02

20

100%

BIC graphic

*The percentage is calculated on total weight of the product

Digital Printing!

1150

MADE FROM 50% OF RECYCLED MATERIAL*
& **100% RECYCLABLE**

DIGITAL
Graphite pencil cut end - 1150



01

METALLIC DIGITAL
Graphite pencil cut end - 1962



47

1151

MADE FROM 46% OF RECYCLED MATERIAL*
& **100% RECYCLABLE**

DIGITAL
Graphic pencil with eraser - 1151



01

METALLIC DIGITAL
Graphic pencil with eraser - 1960



47

*The percentage is calculated on total weight of the product

MOQ 500u.

Standard colours combination

Eraser

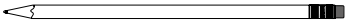

OPAQUE 01

COLOUR CONNECTION 01 12 10 14 59 07 02

Ferrule

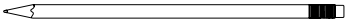

OPAQUE 47 26 2C 34 02

Barrel



OPAQUE 01 03 04 20 02

Metallic

OPAQUE 47 26

GRAPHITE PENCIL CUT END:

MADE FROM 54% OF RECYCLED MATERIAL* & **100% RECYCLABLE**

Add the Möbius loop to your artwork at no additional charge. Please specify it on your order. (Möbius loop imprint defaults to left-hand hand corner.)

Writing modes:

PC
HB Ø 2,3mm

Printing techniques:

(SP) SCREEN PRINTING

(DG) DIGITAL

New optional special packaging:

Plastic Pouch (x3 units)

+ INFO pag. 288

External packaging:

500 ± 3,5 Kg

MADE IN FRANCE

BIC® EVOLUTION® ecolutions®
PENCIL WITH CUT END
1150

BIC® EVOLUTION® ecolutions®
PENCIL WITH ERASER
1151

A SP: max. 1 col.
B SP: max. 2 col.

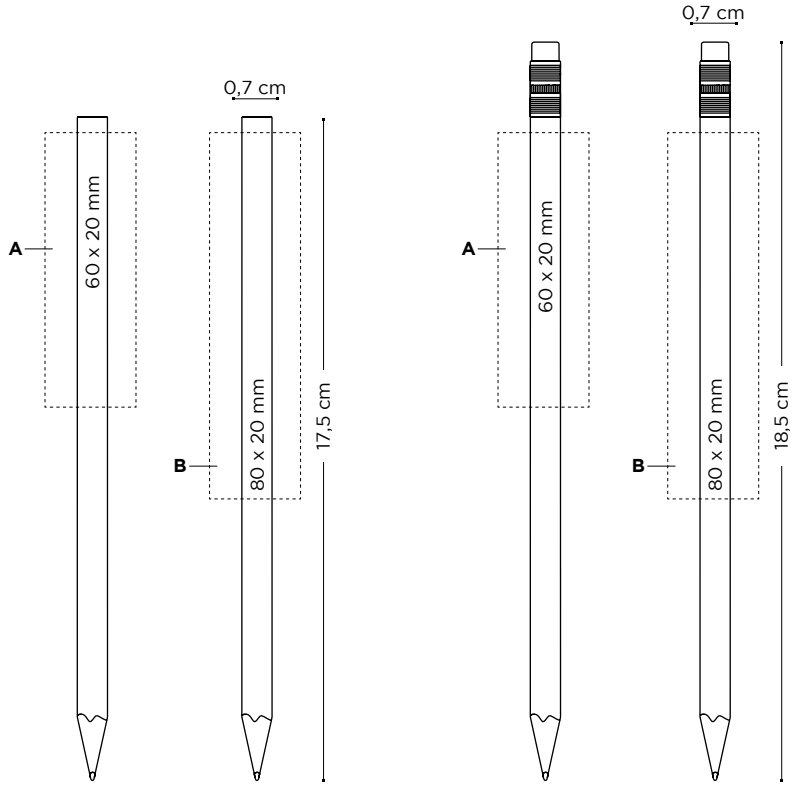

Price (DKK)

BIC® EVOLUTION® ecolutions®	500-999	1000-2499	2500-4999	5000-9999	10000-24999	25000-49999
PENCIL WITH CUT END / 1150						
SP	0,58	0,52	0,48	0,45	0,44	0,40
PENCIL WITH ERASER / 1151						
SP	0,96	0,89	0,86	0,58	0,53	0,53
Additional imprint charge per colour & position						
SP	0,37	0,37	0,37	0,23	0,18	0,18

Prices include 1 colour screenprint in one position.

External packaging:



500 ± 3,5 Kg

MADE IN FRANCE

BIC® EVOLUTION® ecolutions®
PENCIL WITH CUT END
1150 Digital
1962 Metallic Digital

BIC® EVOLUTION® ecolutions®
PENCIL WITH ERASER DIGITAL
1151
PENCIL WITH ERASER
METALLIC DIGITAL
1960

A DG: full-colour (area for images)
B DG: full-colour (area for text)

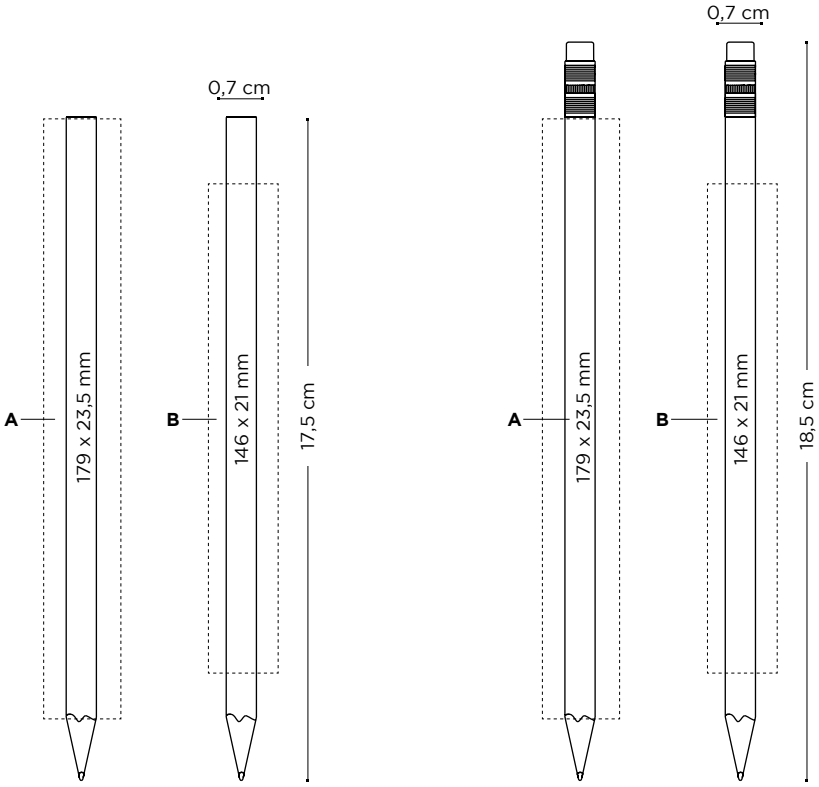

Price (DKK)

BIC® EVOLUTION® ecolutions®	500-999	1000-2499	2500-4999	5000-9999	10000-24999	25000-49999
PENCIL WITH CUT END DIGITAL / 1150						
DG	[illegible]	[illegible]	[illegible]	[illegible]	ⓘ	ⓘ
PENCIL WITH CUT END METALLIC / 1962						
DG	[illegible]	[illegible]	[illegible]	[illegible]	ⓘ	ⓘ
PENCIL WITH ERASER DIGITAL / 1151						
DG	[illegible]	[illegible]	[illegible]	[illegible]	ⓘ	ⓘ
PENCIL WITH ERASER METALLIC DIGITAL / 1960						
DG	[illegible]	[illegible]	[illegible]	[illegible]	ⓘ	ⓘ

Prices include digital imprint on barrel.
ⓘ Price under request.

Now you can have it on set!

New optional special packaging:



Plastic Pouch
(x3 units)

+ INFO pag. 288

External packaging:



1151
1150
1960
500 ± 3,5 Kg



1962
500 ± 2,6 Kg

MADE IN FRANCE

Sprout

Partner BRAND

Customized Sprout pencils are used by companies and organisations all over the world to spread their sustainability message. Once the pencil is too short to write with, plant the stub and watch your message turn into a pot of beautiful herbs, flowers or vegetables.





Combine options!

1. Choose between 10 different seeds
2. Customize your pencil
3. Add a card with planting instructions

53062



Standard barrel



Customized barrel

standard cardboard



back

customizable cardboard!



Standard cardboard packaging



Personalised cardboard packaging

80%

Sprout MULTI COLOURED PENCIL



New!

1 plantable pencil - 4 colours!

1. Choose between 10 different seeds
2. Customize your pencil
3. Add a card with planting instructions

53070



Standard barrel

Customized barrel

standard cardboard

customizable carboard!



back

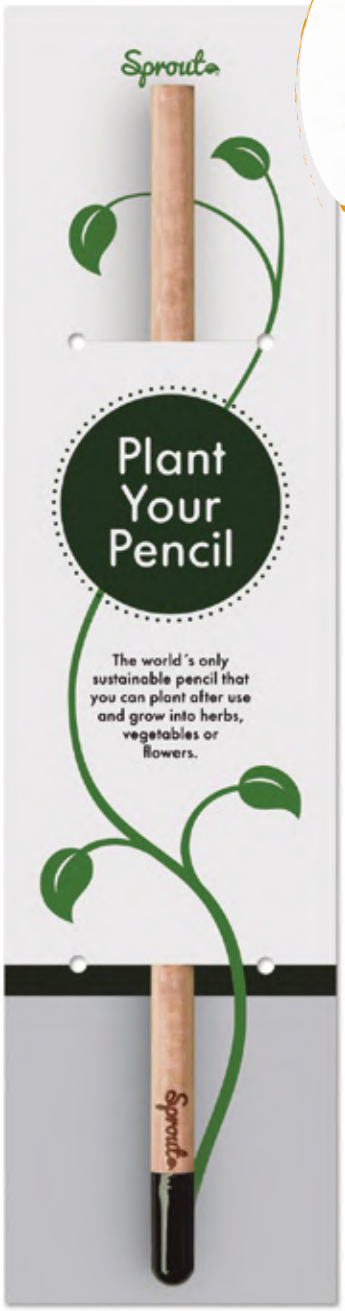

Standard cardboard packaging



Personalised cardboard packaging

80%

MOQ 500
MOQ 1000 (Pencil + personalised cardboard packaging)

Decoration:

SPROUT™ PENCIL

53062 / 53070
A LE
B DG: 4-colour process

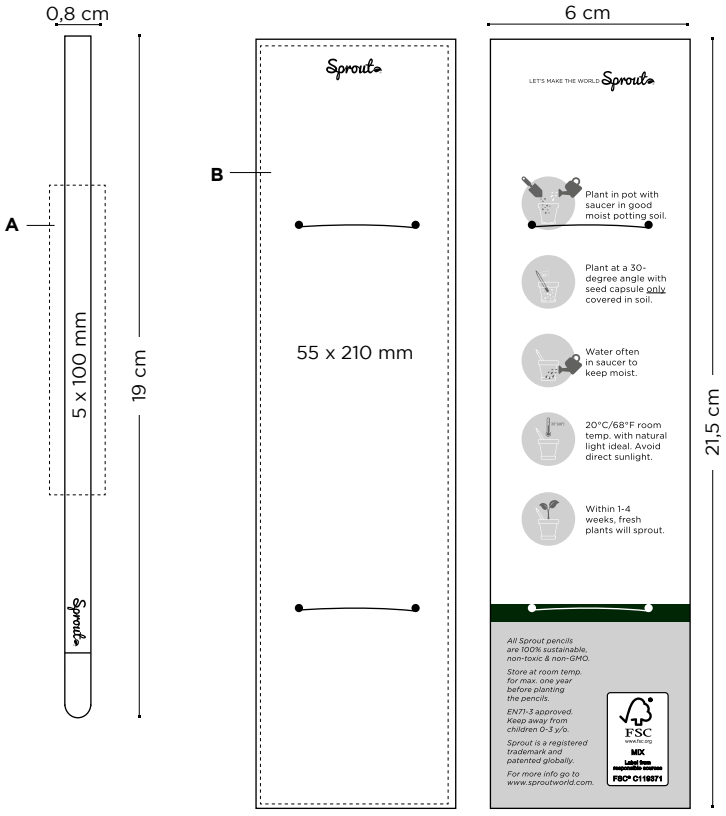

Plant instructions included on the back side.
For customized cardboard, you can change the font and colours!

Writing modes:

Pencil

PC
HB Ø 2,3mm

Printing techniques:

(DG)
DIGITAL

(LE)
LASER

External packaging:

500 ± 2,5 Kg Only pencil
± 5 Kg with cardobard packaging

Packaging:

FSC
www.fsc.org

Check out the video

COLOURING

Set of 6 colouring pens with bright colours supported by the recognised BIC® brands PLASTIDECOR® and EVOLUTION®. Presented in a fully customized carton wallet, this is an ideal promotional item for children and teenagers!




Evolution
France CE
Evolution
France CE

BIC® PLASTIDECOR® SET OF 6 CRAYONS









Colouring crayons 1201



100%

MOQ 500u.

Decoration:

BIC® PLASTIDECOR®
SET OF 6 CRAYONS
1201
A DG: 4-colour process

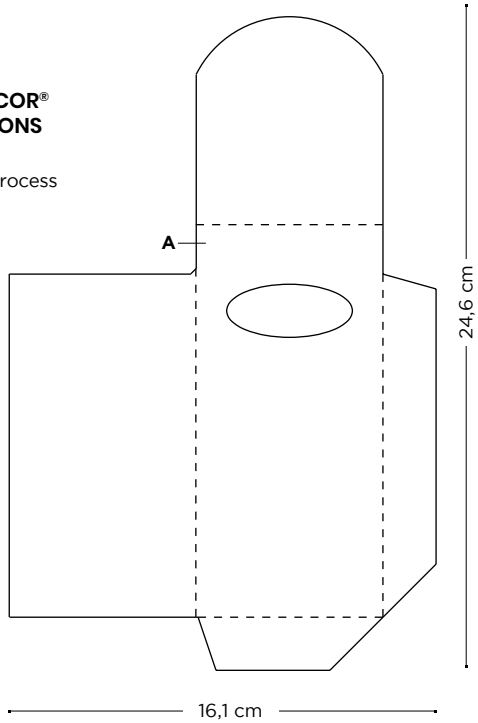

Writing modes:



Printing techniques:



(DG)
DIGITAL

External packaging:



84 ± 3,8 Kg

BIC® EVOLUTION® ecolutions® SET OF 6 COLOURING PENCILS

Colouring pencils 1202



80%

50%

*Made with 50% recycled material.

Bright colours
Couleurs vives

Extra resistant
Super solide



MANUFACTURED AND PRINTED IN BIC FACTORIES

Easy to sharpen!

MOQ 500u.

Decoration:

BIC® EVOLUTION® ECOLUTIONS®
SET OF 6 COLOURING PENCILS
1202
A DG: 4-colour process

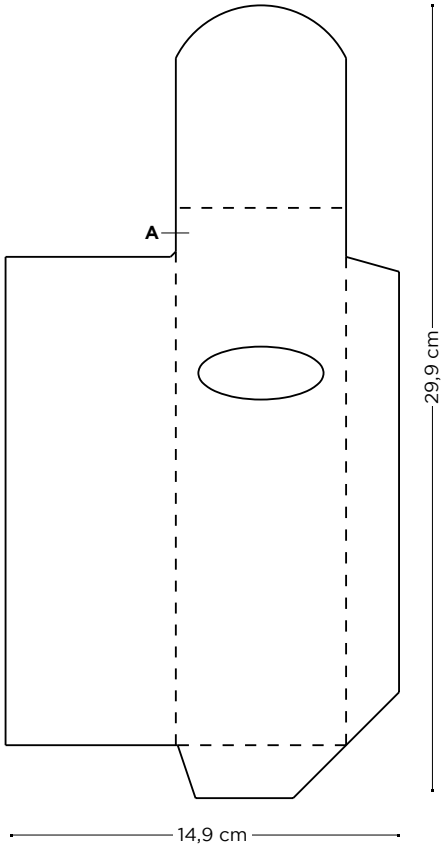

Writing modes:



Printing techniques:



(DG)
DIGITAL

External packaging:



60 ± 2,6 Kg

MADE IN FRANCE

www.bicgraphic.eu

SET OF 6 COLOURING PENCILS









Colouring pencils 1178

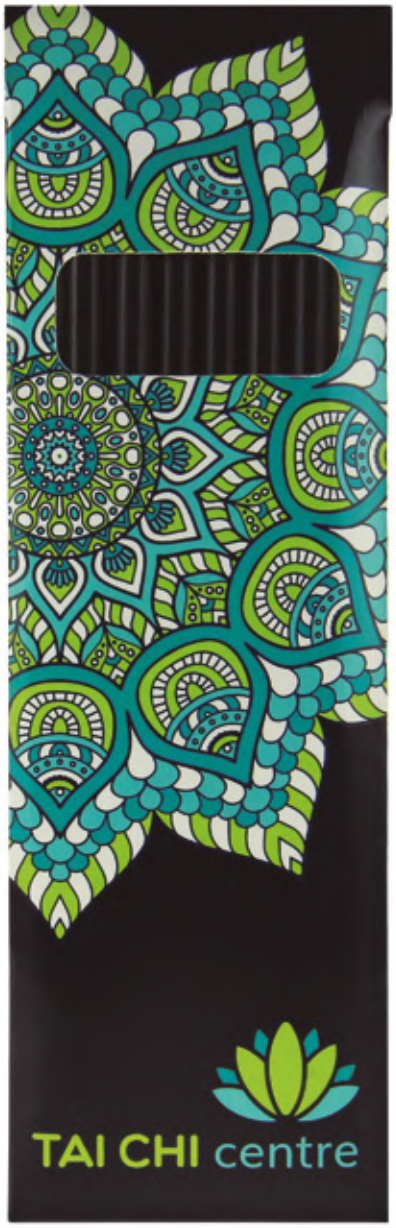

MOQ 500u.

Decoration:

CONTÉ® SET OF 6 COLOURING PENCILS
1178
A DG: 4-colour process

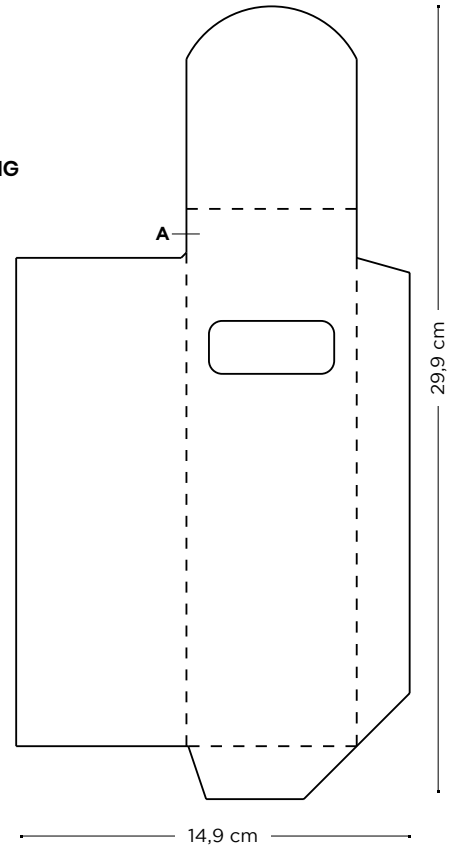

Wood free pencils

80%

Writing modes:



Printing techniques:



(DG)
DIGITAL

External packaging:



60 ± 2,2 Kg

MADE IN FRANCE

Create your own combination

BIC PLASTIDECOR® SET OF 6 CRAYONS or BIC EVOLUTION ecolutions® SET OF 6 COLOURING PENCILS







Writing modes:



Packaging:

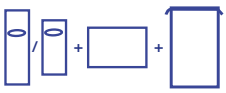

Printing techniques:



(SP) SCREEN PRINTING



(OT) OFFSET TRANSFER

COLOURING SET

MOQ 500u.

Decoration:

BIC® PLASTIDECOR® COLOURING SET
1294



BOX
C DG: 4-colour process

BAG
No imprint (bag)
A SP (bag): max 2 col.
B OT (bag): full-colour

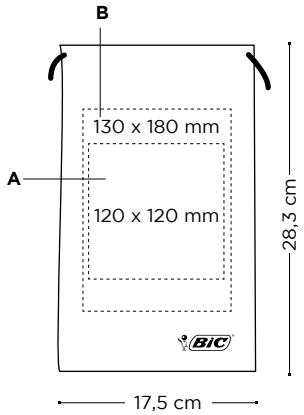

BOOK
C DG: 4-colour process

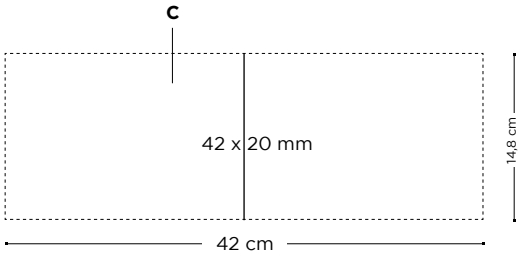

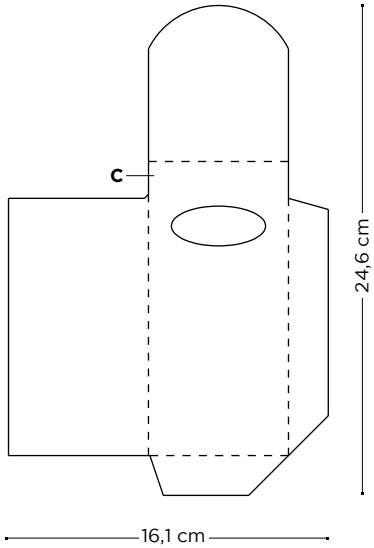

Price (DKK)

BIC® PLASTIDECOR® COLOURING SET 1294	500-999	1000-2499	2500-4999	5000-9999	10000-24999	25000-49999
No imprint (bag)	73,26	52,74	42,15	35,36	ⓘ	ⓘ
SP (bag)	79,75	58,11	47,07	40,21	ⓘ	ⓘ
OT (bag)	86,69	64,83	53,71	46,85	ⓘ	ⓘ

Additional imprint charge per colour & position						
SP	6,49	5,37	4,92	4,85	ⓘ	ⓘ
OT	13,43	12,09	11,56	11,49	ⓘ	ⓘ

BIC® Colouring Pens sets are composed of a carton wallet, a coloring book and a cotton drawstring bag with BIC® logo. Prices include full colour personalisation on the carton box and the coloring book. Imprint on the bag is optional. Prices above vary according to the personalisation technique chosen for the bag.
ⓘ Price under request.

External packaging:



100 ± 10,8 Kg

MOQ 500u.

Decoration:

BIC® EVOLUTION® ECOLUTIONS® COLOURING SET
1293



BAG
No imprint (bag)
A SP (bag): max 2 col.
B OT (bag): full-colour

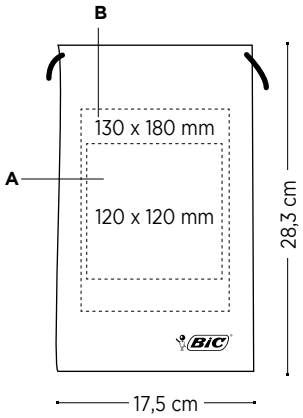

BOOK
C DG: 4-colour process

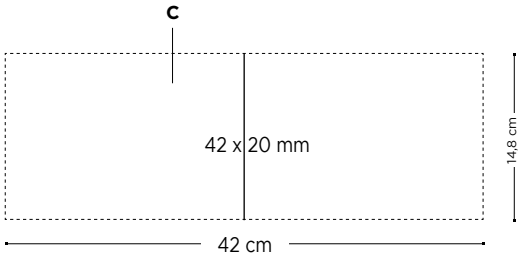

BOX
C DG: 4-colour process

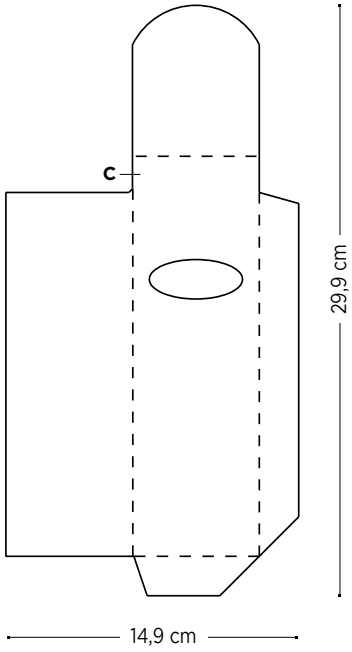

Price (DKK)

BIC® EVOLUTION® ECOLUTIONS® COLOURING SET 1293	500-999	1000-2499	2500-4999	5000-9999	10000-24999	25000-49999
No imprint (bag)	74,45	53,64	42,90	36,03	i	i
SP (bag)	80,94	59,01	47,82	40,88	i	i
OT (bag)	87,88	65,72	54,46	47,52	i	i
Bag: additional imprint charge per colour & position						
SP	6,49	5,37	4,92	4,85	i	i
OT	13,43	12,09	11,56	11,49	i	i

BIC® Colouring Pens sets are made up of a personalised box, a coloring book and a cotton drawstring bag with BIC® logo. Prices include full colour personalisation on the box and the coloring book. Imprint on the bag is optional. Prices above vary according to the personalisation technique chosen for the bag

i Price under request.

External packaging:



100 ± 10,6 Kg

BY BIC COLOURING SET





Writing modes:



Printing techniques:



(SP) SCREEN PRINTING



(OT) OFFSET TRANSFER

External packaging:



100 ± 10,5 Kg

MOQ 500u.

Decoration:

CONTÉ® BY BIC® COLOURING SET
1292



BOX
C DG: 4-colour process

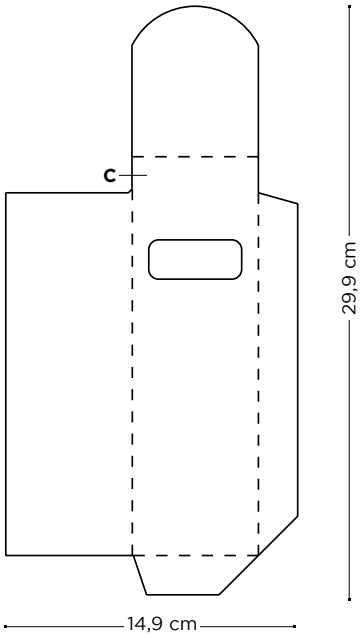

BAG
No imprint (bag)
A SP (bag): max 2 col.
B OT (bag): full-colour

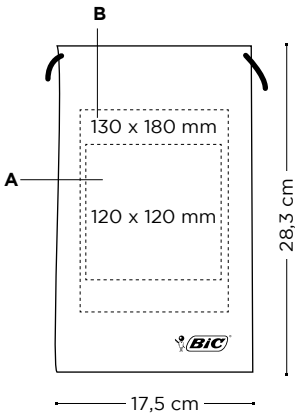

BOOK
C DG: 4-colour process

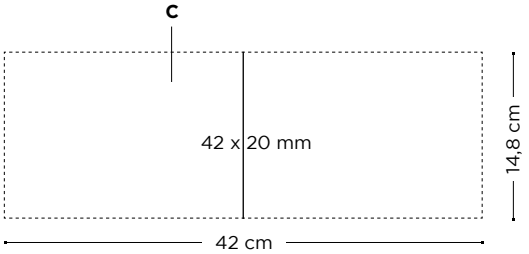

Price (DKK)

CONTÉ® BY BIC® COLOURING SET	500-999	1000-2499	2500-4999	5000-9999	10000-24999	25000-49999
1292						
No imprint (bag)	77,21	56,32	45,88	38,34	i	i
SP (bag)	83,70	61,69	50,80	43,19	i	i
OT (bag)	90,64	68,41	57,44	49,83	i	i
Bag: additional imprint charge per colour & position						
SP	6,49	5,37	4,92	4,85	i	i
OT	13,43	12,09	11,56	11,49	i	i

BIC® Colouring Pens sets are made up of a personalised box , a coloring book and a cotton drawstring bag with BIC® logo. Prices include full colour personalisation on the box and the coloring book. Imprint on the bag is optional. Prices above vary according to the personalisation technique chosen for the bag.
i Price under request.

Tipp-Ex® MINI POCKET MOUSE britePix™

The worldwide recognised correction tape Tipp-Ex® in its compact size, that provides an accurate application for both left and right-handed users with literally no dry time!



1354



100%

51



51

MOQ 250u.

Decoration:

MINI POCKET MOUSE
1354
A/B BP: full-colour
BP Texture: full-colour

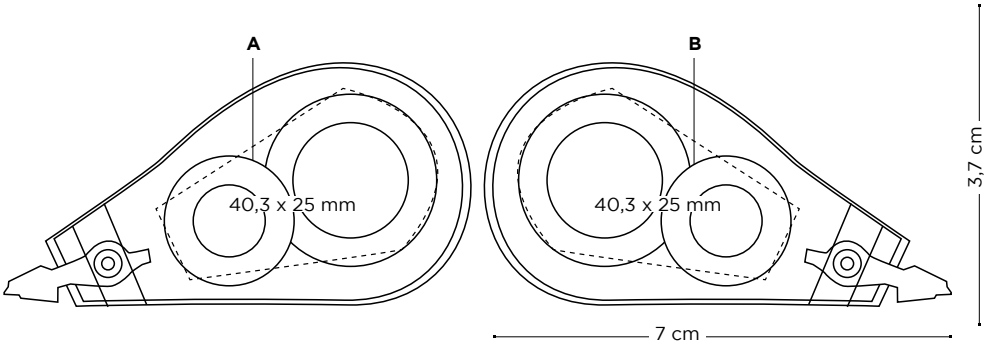

TIPP-EX® MINI POCKET MOUSE 1354	P D 250-499	500-999	1000-2499	2500-4999	5000-9999	10000-24999	25000-49999
BP	13,88	13,13	12,38	11,71	10,97	ⓘ	ⓘ
Additional charges:							
BP	5,22	4,77	4,4	4,18	4,03	ⓘ	ⓘ
BP Texture	3,95	3,58	3,28	3,13	3,06	ⓘ	ⓘ

Prices include one imprint in one position according to specified technique.
ⓘ Price under request.

Writing modes:



T
6 m
*Source: GFK panel – Western Europe 9 – MAT June 2018 – Sales in Value & Volume

Printing techniques:



(BP) britePix™

External packaging:



288 ± 3,2 Kg

Check out the video

PLASTIC PENS

156 Basic Pen
158 Click Pen
160 Stripped Grip Pen
162 White Striped Grip Pen

STYLUS PENS

164 Sleek Stylus Pen

Other writing instruments

156 —— 165

BASIC PEN

12010

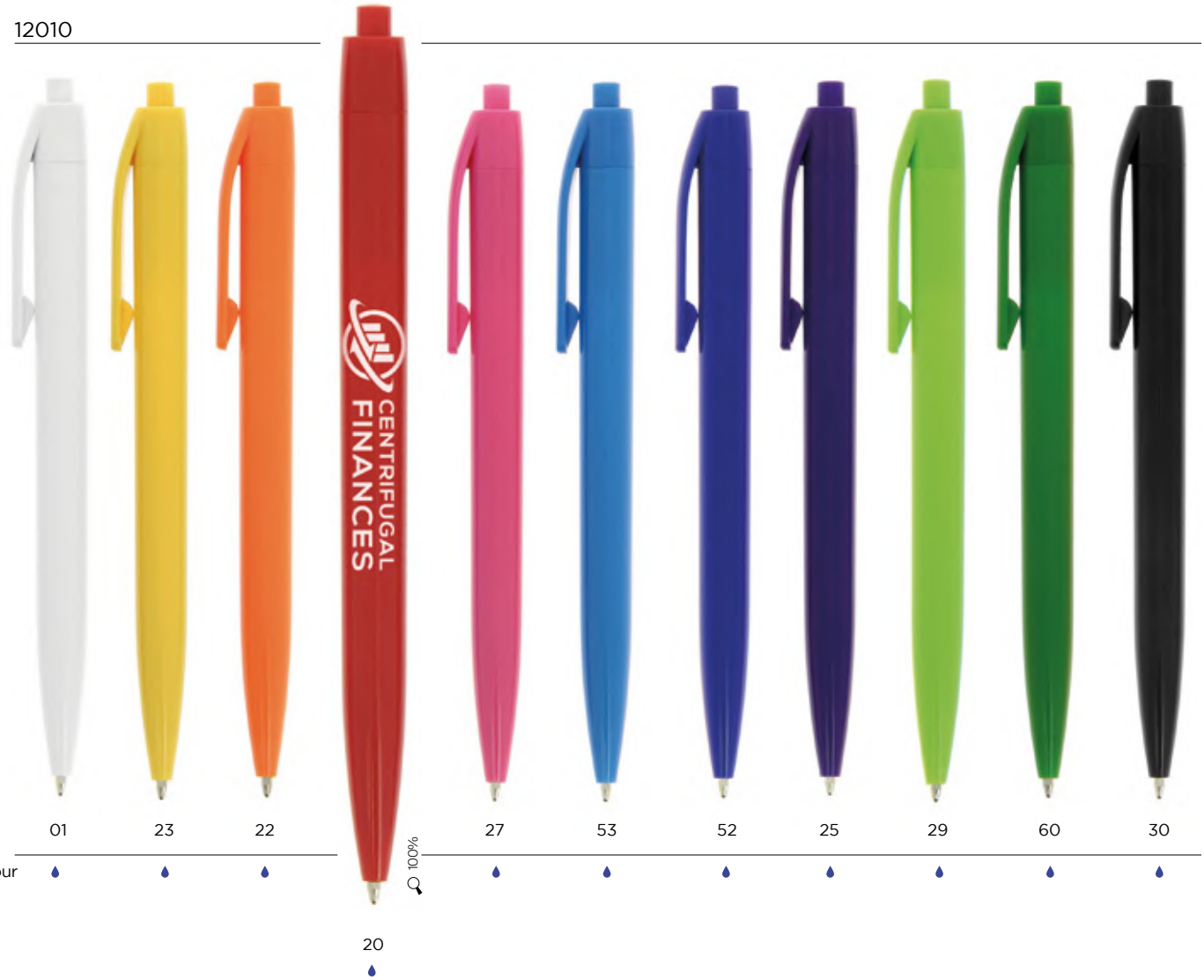

	01	23	22	20	100%	27	53	52	25	29	60	30
Colour ink	●	●	●	●		●	●	●	●	●	●	●

MOQ 500u.

Decoration:

BASIC PEN
12010
A/B SP: max. 1 col.

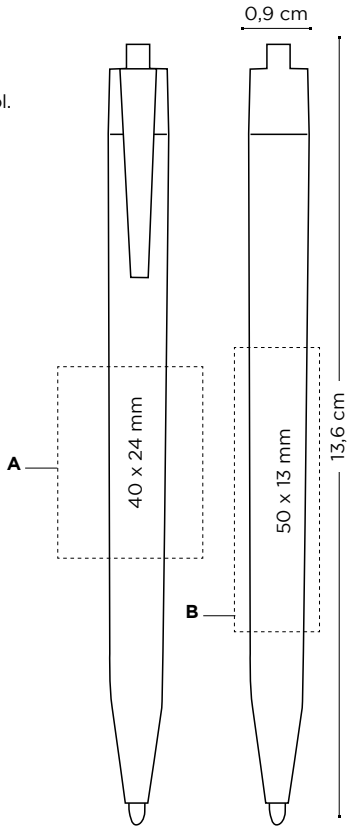

Price (DKK)

BASIC PEN 12010	500-999	1000-2499	2500-4999	5000-9999	10000-24999	25000-49999
unimprinted	1,12	1,04	1,04	0,97	ⓘ	ⓘ
SP	3,73	2,91	2,46	2,24	ⓘ	ⓘ

Prices include 1 colour screenprint in one position.
ⓘ Price under request.

Writing modes:

Ballpen



M

Printing techniques:



(SP)
SCREEN
PRINTING

External packaging:



1000 ± 12,5 Kg

CLICK PEN

11748



	10	23	22	20	27	25	53	50	60	30
Colour ink	●	●	●	●	●	●	●	●	●	●

100%

MOQ 500u.

Decoration:

CLICK PEN
11748
A/B SP: max. 4 col.
C/D PD: max. 4 col.

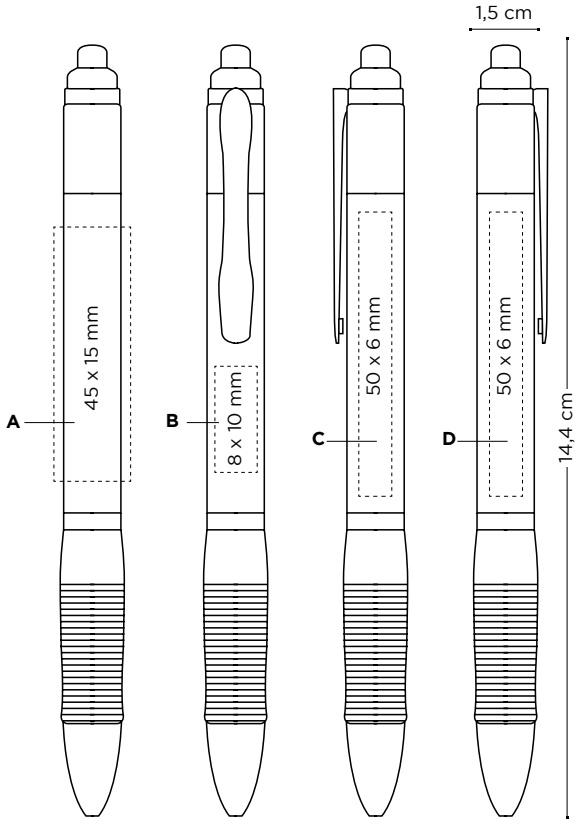

	Price (DKK)					
CLICK PEN 11748	500-999	1000-2499	2500-4999	5000-9999	10000-24999	25000-49999
unimprinted	1,42	1,34	1,34	1,27	ⓘ	ⓘ
SP	4,03	3,21	2,76	2,54	ⓘ	ⓘ
PD	4,55	3,88	3,28	3,06	ⓘ	ⓘ
Additional charges:						
SP	0,97	0,97	0,97	0,90	ⓘ	ⓘ
PD	2,61	1,94	1,42	1,34	ⓘ	ⓘ

Prices include one imprint in one position according to specified technique.
ⓘ Price under request.

Writing modes:

Ballpen



M

Printing techniques:



(SP) SCREEN PRINTING



(PD) PAD PRINTING

External packaging:



1000 ± 9,5 Kg

STRIPED GRIP PEN

11243

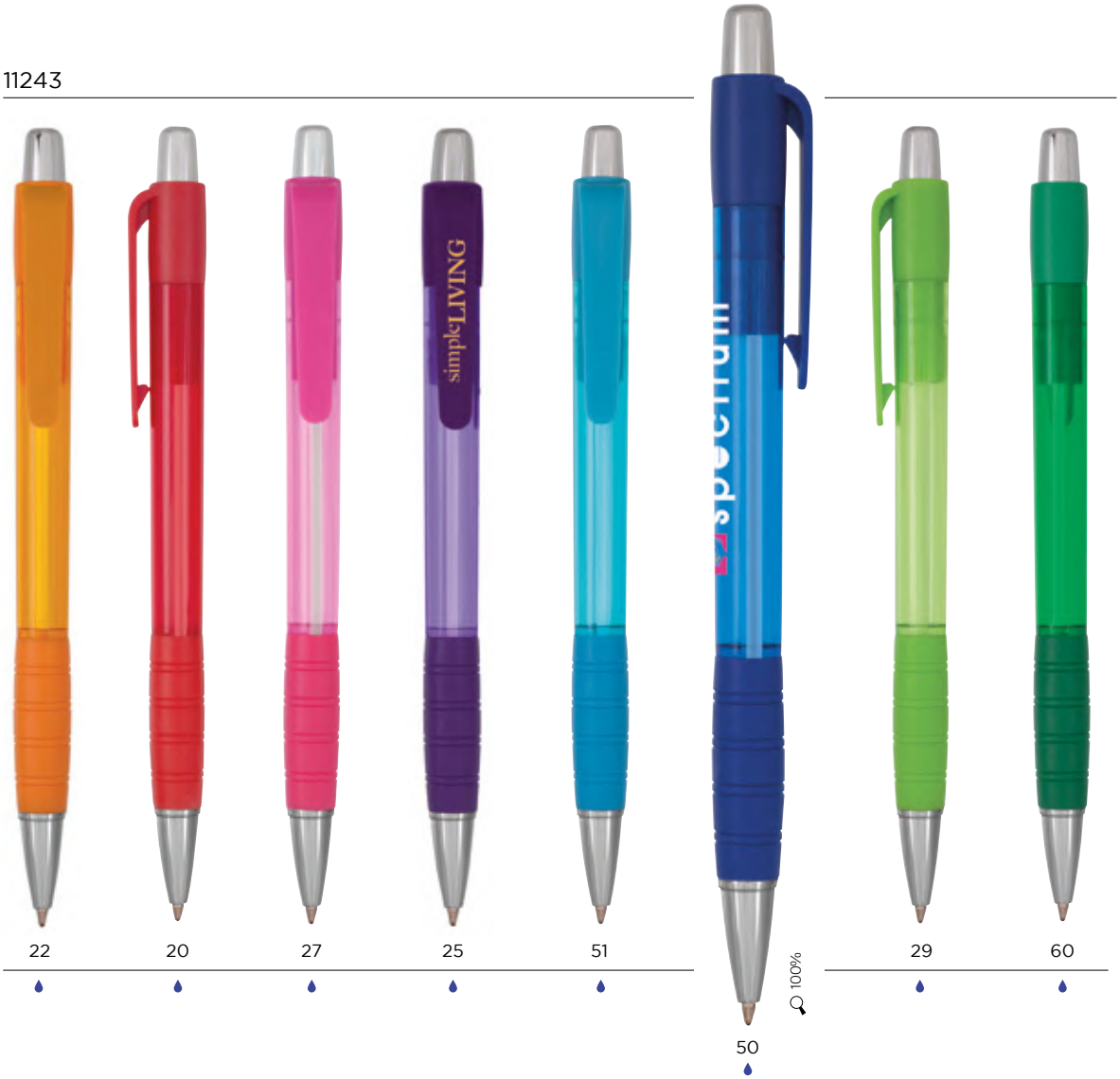

	22	20	27	25	51	50	29	60
Colour ink	●	●	●	●	●	●	●	●

MOQ 500u.

Decoration:

STRIPED GRIP PEN
11243
A SP: max. 2 col.
B PD: max. 1 col.

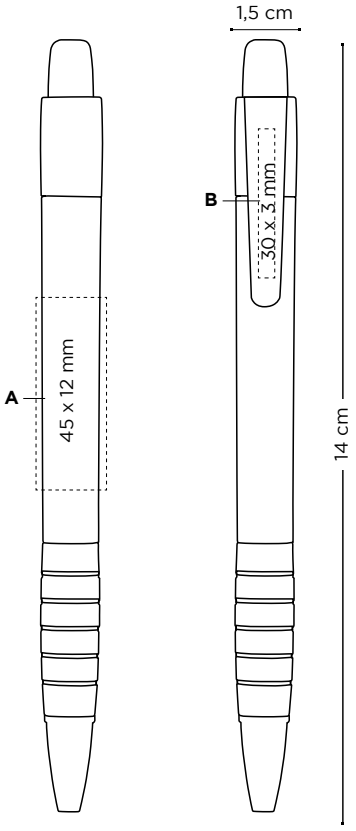

Price (DKK)

STRIPED GRIP PEN 11243	500-999	1000-2499	2500-4999	5000-9999	10000-24999	25000-49999
unimprinted	2,16	2,09	2,09	1,94	ⓘ	ⓘ
SP	4,77	3,95	3,51	3,21	ⓘ	ⓘ
PD	5,30	4,63	4,03	3,73	ⓘ	ⓘ
Additional charges:						
SP	0,97	0,97	0,97	0,90	ⓘ	ⓘ
PD	2,61	1,94	1,42	1,34	ⓘ	ⓘ

Prices include one imprint in one position according to specified technique.
ⓘ Price under request.

Writing modes:

Ballpen



M

Printing techniques:



(SP) SCREEN PRINTING



(PD) PAD PRINTING

External packaging:



1000 ± 9 Kg

WHITE STRIPED GRIP PEN

11303



	20	27	50	25	29	30
Colour ink	💧	💧	💧	💧	💧	💧
			100%			

MOQ 500u.

Decoration:

WHITE STRIPED GRIP PEN
11303
A SP: max. 2 col.
B PD: max. 1 col.

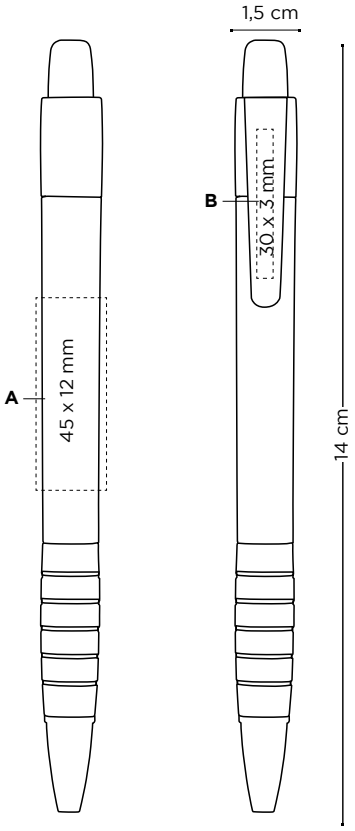

Price (DKK)

WHITE STRIPED GRIP PEN 11303	500-999	1000-2499	2500-4999	5000-9999	10000-24999	25000-49999
unimprinted	2,16	2,09	2,09	1,94	ⓘ	ⓘ
SP	4,77	3,95	3,51	3,21	ⓘ	ⓘ
PD	5,30	4,63	4,03	3,73	ⓘ	ⓘ
Additional charges:						
SP	0,97	0,97	0,97	0,90	ⓘ	ⓘ
PD	2,61	1,94	1,42	1,34	ⓘ	ⓘ

Prices include one imprint in one position according to specified technique.
ⓘ Price under request.

Writing modes:

Ballpen



M

Printing techniques:



(SP) SCREEN PRINTING



(PD) PAD PRINTING

External packaging:



1000 ± 9 Kg

SLEEK STYLUS PEN

SLEEK STYLUS PEN

11666



Colour ink	10	19	23	20	30	39

100%

SLEEK STYLUS MATT PEN

11747



	01	50

100%

SLEEK STYLUS EXECUTIVE PEN

11976



	03	39

100%

MOQ 100u. (LE)
MOQ 500u. (SP)

Decoration:

SLEEK STYLUS PEN
11666
SLEEK STYLUS MATT PEN
11747
SLEEK STYLUS EXECUTIVE PEN
11976

A SP: max. 1 col.
B SP: max. 2 col.
C/D/E/F LE

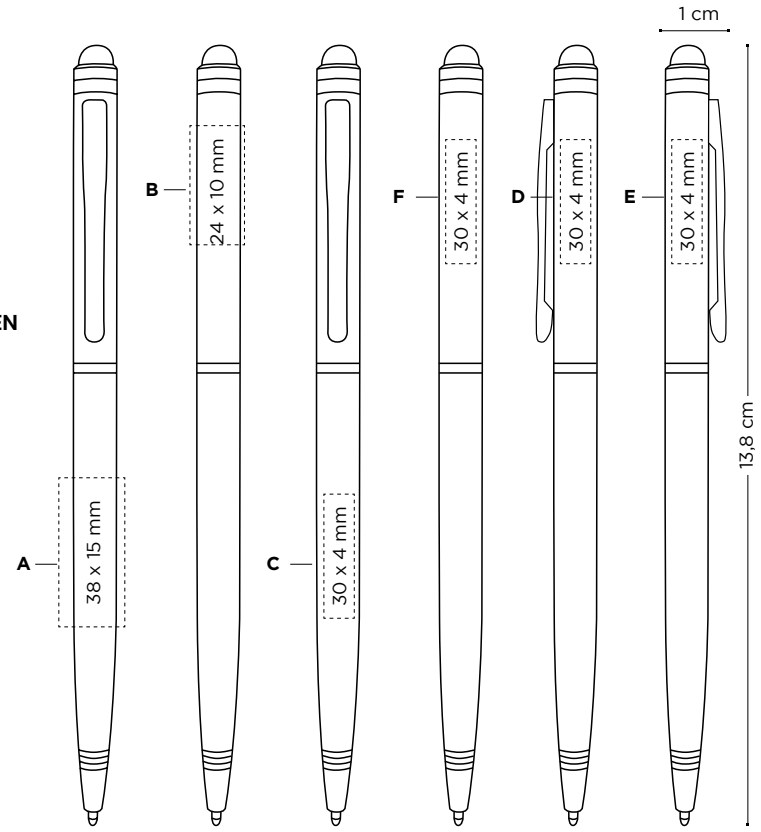

Price (DKK)

SLEEK STYLUS PEN 11666	100-299	300-499	500-999	1000-2499	2500-4999	5000-9999	10000-24999
unimprinted	12,98	12,46	12,01	11,49	11,49	ⓘ	ⓘ
SP	-	17,16	15,74	14,47	14,02	ⓘ	ⓘ
LE	26,56	22,45	20,66	19,40	19,17	ⓘ	ⓘ
11747 / 11976							
unimprinted	13,88	13,35	12,76	12,23	12,23	ⓘ	ⓘ
SP	-	18,05	16,49	15,22	14,77	ⓘ	ⓘ
LE	27,45	23,35	21,41	20,14	19,92	ⓘ	ⓘ
Additional charges:							
SP	-	2,76	2,39	1,64	1,64	ⓘ	ⓘ
LE	13,58	10,00	8,65	7,91	7,68	7,46	ⓘ

Prices include one imprint in one position according to specified technique.
ⓘ Price under request.

Writing modes:

Ballpen

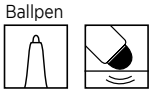

M
Laser engraving not available in yellow/silver colour

Printing techniques:



(SP) SCREEN PRINTING



(LE) LASER

External packaging:



11666
900 ± 12,4 Kg



11747
11976
800 ± 13 Kg

ADHESIVE NOTEPADS

170 BIC® 50 mm x 75 mm Adhesive Notepads
172 BIC® 68 mm x 75 mm Adhesive Notepads
174 BIC® 75 mm x 75 mm Adhesive Notepads
176 BIC® Small Adhesive Die Cut Notepads
178 BIC® 101 mm x 75 mm Adhesive Notepads & BIC® 101 mm x 75 mm Alternating Sheet Imprint
180 BIC® Medium Adhesive Die Cut Notepads
182 BIC® 101 mm x 101 mm Adhesive Notepads
184 BIC® 101 mm x 152 mm Adhesive Notepads

SCRATCH PADS

186 BIC® 75 x 127 mm Non-Adhesive Scratch Pad
187 BIC® 96 x 152 mm Non-Adhesive Scratch Pad

BOOKLETS

190 BIG Flag Booklet
192 BIC® 75 x 75 Booklet
194 BIC® 101 x 75 Booklet
196 BIC® 75 x 75 Adhesive Notepad With Flag Booklet
198 BIC® Clic Stic Organiser & BIC® Clic Stic Mini Digital Organiser
202 BIC® 150 x 150 mm Booklet Organiser
204 BIC® 150 x 150 mm Booklet With Pen Loop

Sticky notes

168 —— 205

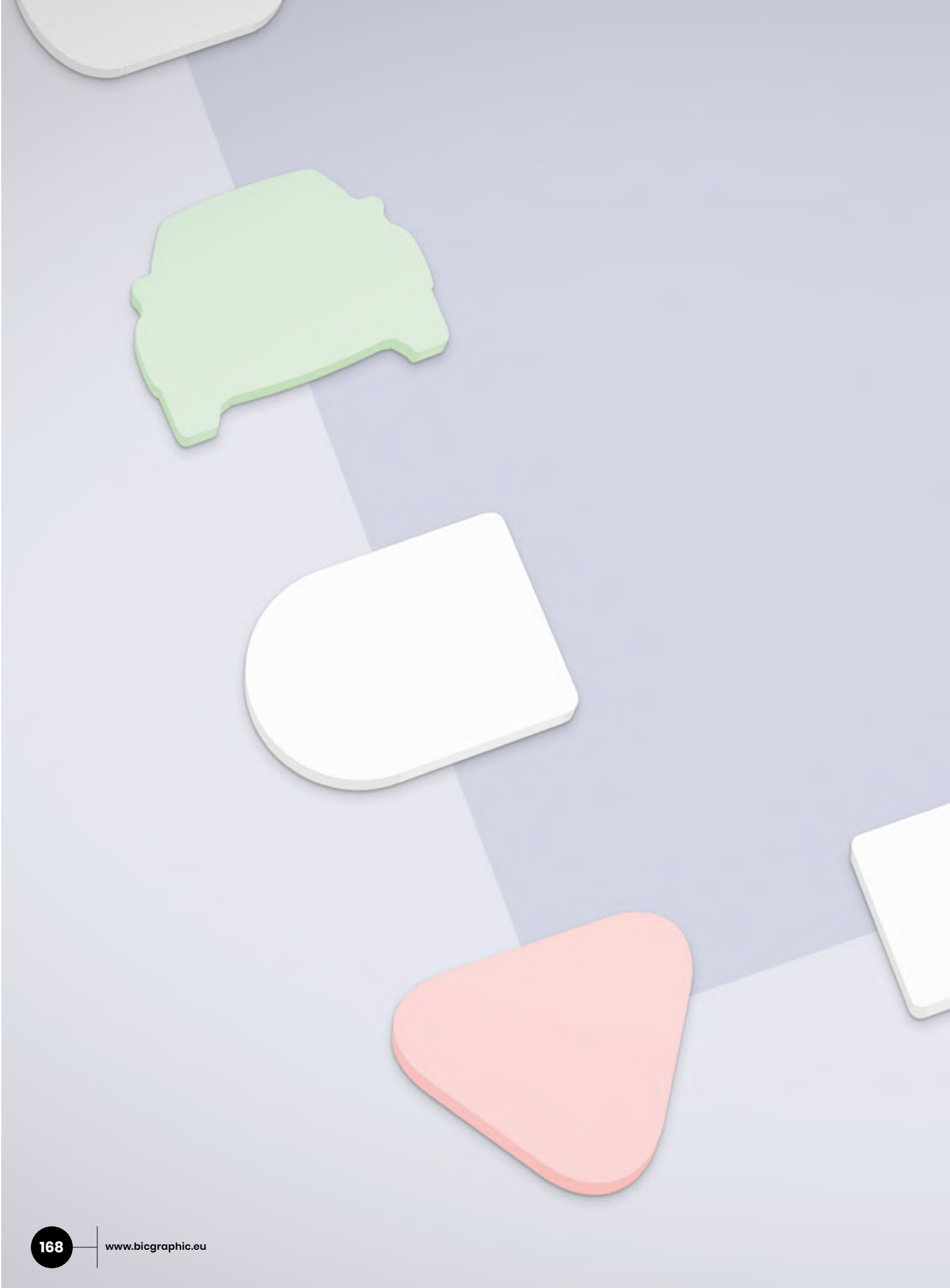

STICKY NOTES

BIC® Sticky Notes, an indispensable tool in any office. Choose between a wide range of sizes and forms, sticky and non sticky.



50 MM X 75 MM ADHESIVE NOTEPADS

ecolutions® VERSION AVAILABLE

MADE WITH 100% FSC CERTIFIED PAPER
& **100% RECYCLABLE**

MANUFACTURED AND PRINTED IN BIC FACTORIES



150%



100%

Ideal pocket size
for mailing campaigns!

Exact colour match:

≥ 500 units

Paper type:

- ☐ Standard 80g
- ☐ Recycled 80g

Special packaging: shrink-wrapped

Nº Sheets	Units per pack
25	10
50	5
100	1

Optional Packaging:
Cello Wrap 1, 2, 3 units

Printing techniques:



(DG)
DIGITAL

MADE IN SPAIN

ECOLUTIONS VERSION: MADE OF 100% RECYCLED FIBRE* & **100% RECYCLABLE**
NON ECOLUTIONS VERSION: MADE WITH 100% FSC CERTIFIED PAPER & **100% RECYCLABLE**

Decoration:

BIC® 50 MM X 75 MM ADHESIVE NOTEPADS **MOQ 500u.**

A DG: 4-colour process

25 3522
ecolutions® 3520

50 3552
ecolutions® 3550

100 3582
ecolutions® 3580

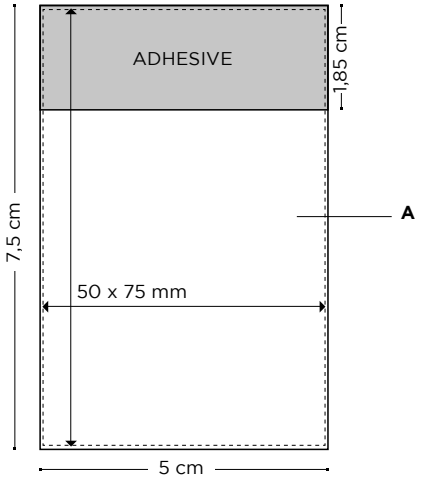

Price (DKK)

BIC® 50 MM X 75 MM ADHESIVE NOTEPADS	500-999	1000-2499	2500-4999	5000-9999	10000-24999	25000-49999
25 — 3522						
DG	3,51	2,91	1,94	1,64	1,64	1,64
ecolutions® 3520						
DG	[illegible]	[illegible]	[illegible]	[illegible]	ⓘ	ⓘ
50 — 3552						
DG	[illegible]	[illegible]	[illegible]	[illegible]	[illegible]	[illegible]
ecolutions® 3550						
DG	[illegible]	[illegible]	[illegible]	[illegible]	ⓘ	ⓘ
100 — 3582						
DG	[illegible]	[illegible]	[illegible]	[illegible]	[illegible]	[illegible]
ecolutions® 3580						
DG	[illegible]	[illegible]	[illegible]	[illegible]	ⓘ	ⓘ

Additional charges:

Exact colour match on pad	[illegible]

Prices include 4-colour process imprint.
Orders must be multiples of the minimum order quantity.
Additional charge for shrink-wrapped pack: [illegible]

ⓘ Price under request.

External Packaging:



25 **1000** ± 8,7 Kg



50 **500** ± 8,5 Kg



100 **250** ± 8,4 Kg

*The percentage is calculated excluding backsheet

68 MM X 75 MM ADHESIVE NOTEPADS

ecolutions® VERSION AVAILABLE

MANUFACTURED AND PRINTED IN BIC FACTORIES



130 %

Sticky Notes ideal to always take your messages with you!

Exact colour match:

≥ 500 units

Paper type:

- ☐ Standard 80g
- ☐ Recycled 80g

Special packaging: shrink-wrapped

Nº Sheets	Units per pack
25	10
50	5
100	1

Optional Packaging:
Cello Wrap 1, 2, 3 units

Printing techniques:



(DG) DIGITAL

MADE IN SPAIN

ECOLUTIONS VERSION: MADE OF 100% RECYCLED FIBRE* & **100% RECYCLABLE**
NON ECOLUTIONS VERSION: MADE WITH 100% FSC CERTIFIED PAPER & **100% RECYCLABLE**

Decoration:

BIC® 68 MM X 75 MM ADHESIVE NOTEPADS **MOQ 500u.**

A DG: 4-colour process

25 3502
ecolutions® 3500

50 3532
ecolutions® 3530

100 3562
ecolutions® 3560

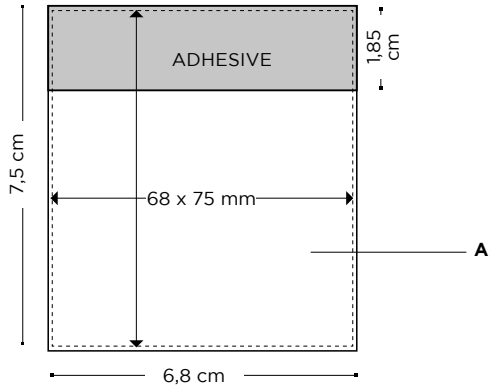

Price (DKK)

BIC® 68 MM X 75 MM ADHESIVE NOTEPADS	500-999	1000-2499	2500-4999	5000-9999	10000-24999	25000-49999
25						
3502						
DG	4,18	3,43	2,24	1,79	1,79	1,79
ecolutions® 3500						
DG	[illegible]	[illegible]	[illegible]	[illegible]	ⓘ	ⓘ
50						
3532						
DG	[illegible]	[illegible]	[illegible]	[illegible]	[illegible]	[illegible]
ecolutions® 3530						
DG	[illegible]	[illegible]	[illegible]	[illegible]	ⓘ	ⓘ
100						
3562						
DG	[illegible]	[illegible]	[illegible]	[illegible]	[illegible]	[illegible]
ecolutions® 3560						
DG	[illegible]	[illegible]	[illegible]	[illegible]	ⓘ	ⓘ

Additional charges:

Exact colour match on pad	[illegible]

Prices include 4-colour process imprint.
Orders must be multiples of the minimum order quantity.
Additional charge for shrink-wrapped pack: [illegible]
ⓘ Price under request.

External Packaging:


25
500 ± 5,7 Kg


50
250 ± 5,4 Kg


100
130 ± 5,6 Kg

*The percentage is calculated excluding backsheet

75 MM X 75 MM ADHESIVE NOTEPADS

ecolutions® VERSION AVAILABLE

MADE WITH 100% FSC CERTIFIED PAPER
& **100% RECYCLABLE**

MANUFACTURED AND PRINTED IN BIC FACTORIES



130%

Large imprint area in a small size!

Exact colour match:

≥ 500 units

Paper type:

- ☐ Standard 80g
- ☐ Recycled 80g

Special packaging: shrink-wrapped

Nº Sheets	Units per pack
25	10
50	5
100	1

Optional Packaging:
Cello Wrap 1, 2, 3 units

Printing techniques:



(DG)
DIGITAL

MADE IN SPAIN

ECOLUTIONS VERSION: MADE OF 100% RECYCLED FIBRE* & **100% RECYCLABLE**
NON ECOLUTIONS VERSION: MADE WITH 100% FSC CERTIFIED PAPER & **100% RECYCLABLE**

Decoration:

BIC® 75 MM X 75 MM ADHESIVE NOTEPADS **MOQ 500u.**

A DG: 4-colour process

25 3507
ecolutions® 3505

50 3537
ecolutions® 3535

100 3567
ecolutions® 3565

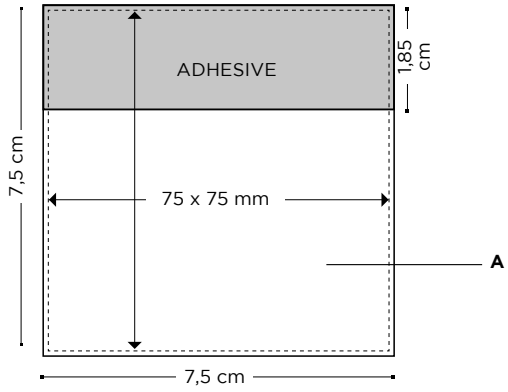

Price (DKK)

BIC® 75 MM X 75 MM ADHESIVE NOTEPADS	500-999	1000-2499	2500-4999	5000-9999	10000-24999	25000-49999
25 — 3507						
DG	4,40	3,58	2,46	1,94	1,87	1,87
ecolutions® 3505						
DG	[illegible]	[illegible]	[illegible]	[illegible]	ⓘ	ⓘ
50 — 3537						
DG	[illegible]	[illegible]	[illegible]	[illegible]	[illegible]	[illegible]
ecolutions® 3535						
DG	[illegible]	[illegible]	[illegible]	[illegible]	ⓘ	ⓘ
100 — 3567						
DG	[illegible]	[illegible]	[illegible]	[illegible]	[illegible]	[illegible]
ecolutions® 3565						
DG	[illegible]	[illegible]	[illegible]	[illegible]	ⓘ	ⓘ

Additional charges:

Exact colour match on pad	[illegible]

Prices include 4-colour process imprint.
Orders must be multiples of the minimum order quantity.
Additional charge for shrink-wrapped pack: [illegible]
ⓘ Price under request.

External Packaging:


25
500 ± 6,2 Kg


50
250 ± 5,9 Kg


100
130 ± 6,1 Kg

*The percentage is calculated excluding backsheet

SMALL ADHESIVE DIE CUT NOTEPADS

MANUFACTURED AND PRINTED IN BIC FACTORIES



Choose from 7 stock shapes!
Custom-made shapes available upon request

Exact colour match:

≥ 500 units

Paper type:

☐ Standard 80g

Special packaging: shrink-wrapped

Nº Sheets	Units per pack
25	10
50	5
100	1

Optional Packaging:
Cello Wrap 1, 2, 3 units

Printing techniques:



(DG) DIGITAL

MADE IN SPAIN

MADE WITH 100% FSC CERTIFIED PAPER
& **100% RECYCLABLE**

Decoration:

BIC® SMALL ADHESIVE DIE CUT NOTEPADS **MOQ 500u.**

A DG: 4-colour process

25 3603

50 3607

100 3611

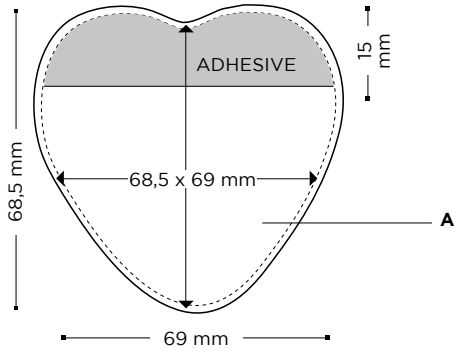

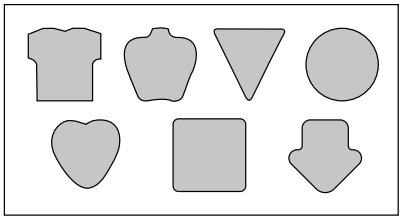

Price (DKK)

	BIC® SMALL ADHESIVE DIE CUT NOTEPAD	500-999	1000-2499	2500-4999	5000-9999	10000-24999	25000-49999
25	3603						
	DG	7,24	5,74	3,95	3,21	3,13	3,06
50	3607						
	DG	10,97	8,21	5,97	5,22	5,15	5,07
100	3611						
	DG	17,01	14,70	12,23	11,34	11,12	10,89

Additional charges:

Exact colour match on pad	783DKK
Custom made shape set up charge	8915DKK
Repeat order (per order &/or shape)	Free

Prices include 4-colour process imprint.

Orders must be multiples of the minimum order quantity.

Additional charge for shrink-wrapped pack: 0,82DKK

External Packaging:



25

500 ± 6,2 Kg



50

250 ± 6 Kg



100

130 ± 6,2 Kg

101 MM X 75 MM ADHESIVE NOTEPADS & BIC® 101 MM X 75 MM ALTERNATING SHEET IMPRINT

ecolutions® VERSION AVAILABLE

MADE WITH 100% FSC CERTIFIED PAPER
& **100% RECYCLABLE**

MANUFACTURED AND PRINTED IN BIC FACTORIES

Indispensable in any office!
Most popular Sticky Notes pad size!



100%

Alternate 2 messages for double-impact communication!

Exact colour match:

≥ 500 units

Paper type:

- ☐ Standard 80g
- ☐ Recycled 80g

Special packaging: shrink-wrapped

Nº Sheets	Units per pack
25	10
50	5
100	1

Optional Packaging:
Cello Wrap 1, 2, 3 units

Printing techniques:



(DG)
DIGITAL

MADE IN SPAIN

ECOLUTIONS VERSION: MADE OF 100% RECYCLED FIBRE* & **100% RECYCLABLE**
NON ECOLUTIONS VERSION: MADE WITH 100% FSC CERTIFIED PAPER & **100% RECYCLABLE**

Decoration:

BIC® 101 MM X 75 MM ADHESIVE NOTEPADS & ALTERNATING SHEET IMPRINT

A DG: 4-colour process

25 — 3512 — **MOQ 500u.**
ecolutions® 3510
Alternating Sheet 3514

50 — 3542 — **MOQ 250u.**
ecolutions® 3540
Alternating Sheet 3544

100 — 3572 — **MOQ 500u.**
ecolutions® 3570

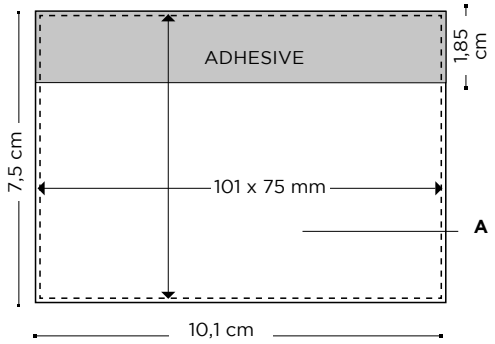

Price (DKK)

BIC® 101 MM X 75 MM ADHESIVE NOTEPADS & ALTERNATING SHEET	250-499	500-999	1000-2499	2500-4999	5000-9999	10000-24999	25000-49999
25 — 3512							
DG	-	5,22	4,03	3,06	2,46	2,39	2,31
ecolutions® 3510							
DG	-	[illegible]	[illegible]	[illegible]	[illegible]	ⓘ	ⓘ
Alternating Sheet 3514							
DG	-	[illegible]	[illegible]	[illegible]	[illegible]	[illegible]	[illegible]
50 — 3542							
DG	[illegible]	[illegible]	[illegible]	[illegible]	[illegible]	[illegible]	[illegible]
ecolutions® 3540							
DG	[illegible]	[illegible]	[illegible]	[illegible]	[illegible]	ⓘ	ⓘ
Alternating Sheet 3544							
DG	[illegible]	[illegible]	[illegible]	[illegible]	[illegible]	[illegible]	[illegible]
100 — 3572							
DG	-	[illegible]	[illegible]	[illegible]	[illegible]	[illegible]	[illegible]
ecolutions® 3570							
DG	-	[illegible]	[illegible]	[illegible]	[illegible]	ⓘ	ⓘ

Additional charges:

Exact colour match on pad	[illegible]

Prices include 4-colour process imprint.
Orders must be multiples of the minimum order quantity.
Additional charge for shrink-wrapped pack: [illegible]
ⓘ Price under request.

External Packaging:



25 — **500** ± 8,2 Kg



50 — **250** ± 8 Kg



100 — **130** ± 8,3 Kg

*The percentage is calculated excluding backsheet

MEDIUM ADHESIVE DIE CUT NOTEPADS

ecolutions® VERSION AVAILABLE

MADE WITH 100% FSC CERTIFIED PAPER
& **100% RECYCLABLE**

MANUFACTURED AND PRINTED IN BIC FACTORIES



Choose from 28 stock shapes!
Custom-made shapes also available upon request

Exact colour match:

≥ 500 units

Paper type:

- ☐ Standard 80g
- ☐ Recycled 80g

Special packaging: shrink-wrapped

Nº Sheets	Units per pack
25	10
50	5
100	1

Optional Packaging:
Cello Wrap 1, 2, 3 units

Printing techniques:



(DG)
DIGITAL

MADE IN SPAIN

ECOLUTIONS VERSION: MADE OF 100% RECYCLED FIBRE* & **100% RECYCLABLE**
NON ECOLUTIONS VERSION: MADE WITH 100% FSC CERTIFIED PAPER & **100% RECYCLABLE**

Decoration:

BIC® MEDIUM ADHESIVE DIE CUT NOTEPADS **MOQ 500u.**

A DG: 4-colour process

25 — 3604 / ecolutions® 3602

50 — 3608 / ecolutions® 3606

100 — 3612 / ecolutions® 3610

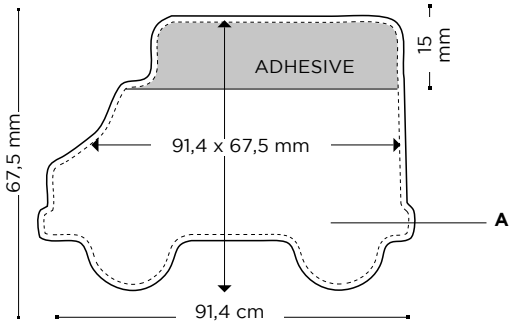

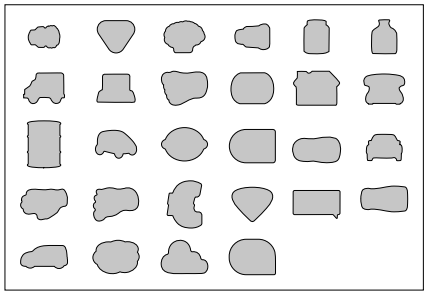

Price (DKK)

BIC® MEDIUM ADHESIVE DIE CUT NOTEPADS	500-999	1000-2499	2500-4999	5000-9999	10000-24999	25000-49999
25 — 3604						
DG	7,98	6,19	4,77	3,73	3,66	3,58
ecolutions® 3602						
DG	[illegible]	[illegible]	[illegible]	[illegible]	ⓘ	ⓘ
50 — 3608						
DG	[illegible]	[illegible]	[illegible]	[illegible]	[illegible]	[illegible]
ecolutions® 3606						
DG	[illegible]	[illegible]	[illegible]	[illegible]	ⓘ	ⓘ
100 — 3612						
DG	[illegible]	[illegible]	[illegible]	[illegible]	[illegible]	[illegible]
ecolutions® 3610						
DG	[illegible]	[illegible]	[illegible]	[illegible]	ⓘ	ⓘ

Additional charges:

Exact colour match on pad	[illegible]
Custom made shape set up charge (per order &/or shape)	[illegible]
Repeat order	Free

Prices include 4-colour process imprint.
Orders must be multiples of the minimum order quantity.
Additional charge for shrink-wrapped pack: [illegible]
ⓘ Price under request.

External Packaging:



25 — **400** ± 6,6 Kg



50 — **200** ± 6,4 Kg



100 — **100** ± 6,4 Kg

*The percentage is calculated excluding backsheet

101 MM X 101 MM ADHESIVE NOTEPADS

ecolutions® VERSION AVAILABLE

MADE WITH 100% FSC CERTIFIED PAPER
& **100% RECYCLABLE**

MANUFACTURED AND PRINTED IN BIC FACTORIES



Take advantage of this large imprint area!

Exact colour match:

≥ 500 units

Paper type:

- ☐ Standard 80g
- ☐ Recycled 80g

Special packaging: shrink-wrapped

Nº Sheets	Units per pack
25	10
50	5
100	1

Optional Packaging:
Cello Wrap 1, 2, 3 units

Printing techniques:



(DG) DIGITAL

MADE IN SPAIN

ECOLUTIONS VERSION: MADE OF 100% RECYCLED FIBRE* & **100% RECYCLABLE**
NON ECOLUTIONS VERSION: MADE WITH 100% FSC CERTIFIED PAPER & **100% RECYCLABLE**

Decoration:

BIC® 101 MM X 101 MM ADHESIVE NOTEPADS **MOQ 500u.**

A DG: 4-colour process

25 3518
ecolutions® 3516

50 3548
ecolutions® 3546

100 3578
ecolutions® 3576

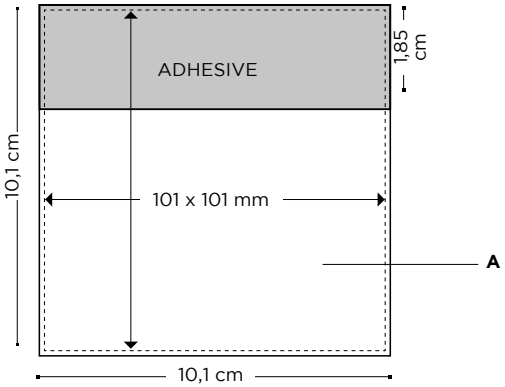

Price (DKK)

BIC® 101 MM X 101 MM ADHESIVE NOTEPADS	500-999	1000-2499	2500-4999	5000-9999	10000-24999	25000-49999
25 — 3518						
DG	7,46	5,22	3,88	3,21	3,13	3,06
ecolutions® 3516						
DG	[illegible]	[illegible]	[illegible]	[illegible]	ⓘ	ⓘ
50 — 3548						
DG	[illegible]	[illegible]	[illegible]	[illegible]	[illegible]	[illegible]
ecolutions® 3546						
DG	[illegible]	[illegible]	[illegible]	[illegible]	ⓘ	ⓘ
100 — 3578						
DG	[illegible]	[illegible]	[illegible]	[illegible]	[illegible]	[illegible]
ecolutions® 3576						
DG	[illegible]	[illegible]	[illegible]	[illegible]	ⓘ	ⓘ

Additional charges:

Exact colour match on pad	[illegible]

Prices include 4-colour process imprint.
Orders must be multiples of the minimum order quantity.
Additional charge for shrink-wrapped pack: 0,[illegible]
ⓘ Price under request.

External Packaging:


25
400 ± 9,5 Kg


50
200 ± 9,1 Kg


100
100 ± 8,7 Kg

*The percentage is calculated excluding backsheet

101 MM X 130 MM ADHESIVE NOTEPADS

ecolutions® VERSION AVAILABLE

MADE WITH 100% FSC CERTIFIED PAPER
& **100% RECYCLABLE**

MANUFACTURED AND PRINTED IN BIC FACTORIES

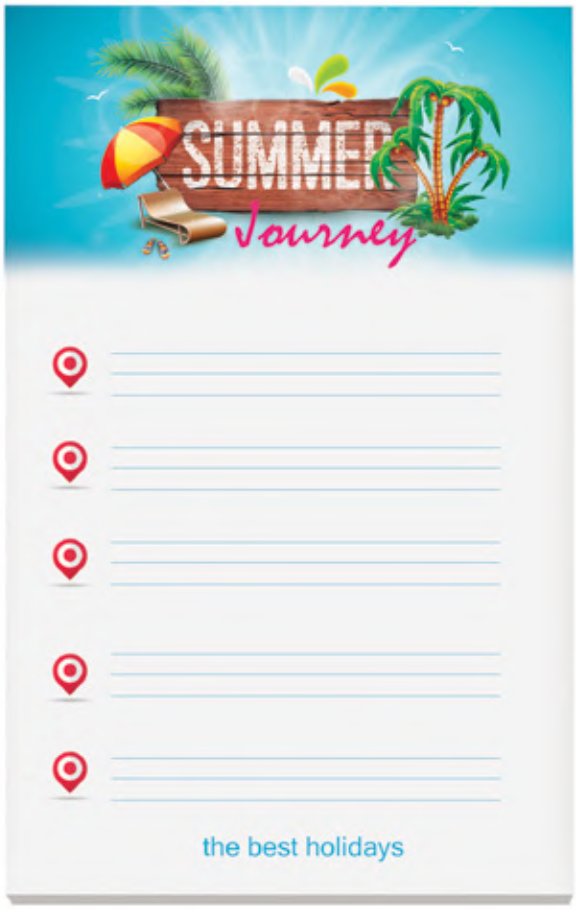

130%

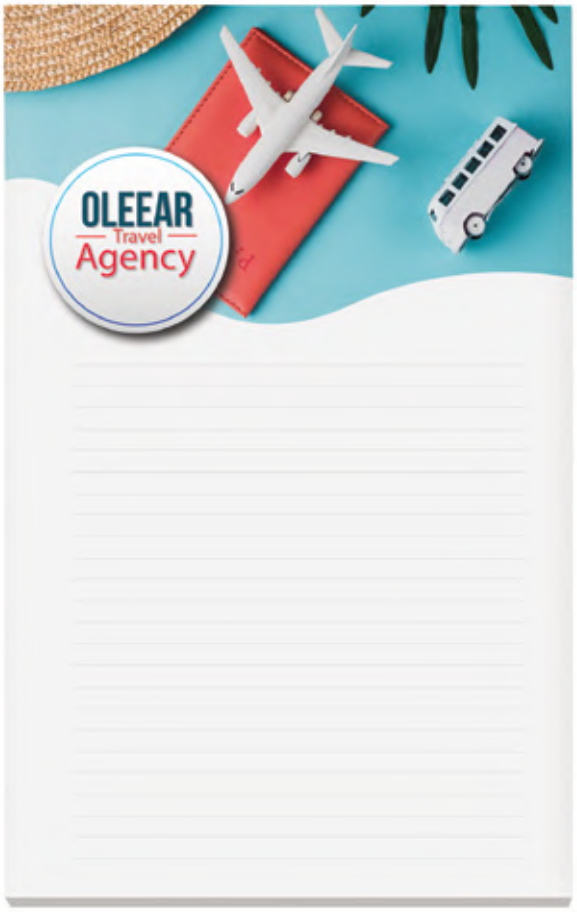

Large imprint area for big messages!
Don't miss anything!

Exact colour match:

≥ 500 units

Paper type:

- ☐ Standard 80g
- ☐ Recycled 80g

Special packaging: shrink-wrapped

Nº Sheets	Units per pack
25	10
50	5
100	1

Optional Packaging:
Cello Wrap 1, 2, 3 units

Printing techniques:



(DG) DIGITAL

MADE IN SPAIN

ECOLUTIONS VERSION: MADE OF 100% RECYCLED FIBRE* & **100% RECYCLABLE**
NON ECOLUTIONS VERSION: MADE WITH 100% FSC CERTIFIED PAPER & **100% RECYCLABLE**

Decoration:

BIC® 101 MM X 130 MM ADHESIVE NOTEPADS **MOQ 500u.**

A DG: 4-colour process

25 3517
ecolutions® 3515

50 3547
ecolutions® 3545

100 3577
ecolutions® 3575

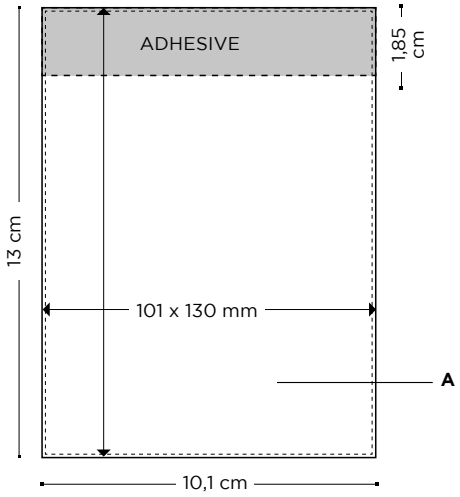

Price (DKK)

BIC® 101 MM X 130 MM ADHESIVE NOTEPADS	500-999	1000-2499	2500-4999	5000-9999	10000-24999	25000-49999
25 — 3517						
DG	8,93	7,59	5,65	4,84	4,76	4,69
ecolutions® 3515						
DG	[illegible]	[illegible]	[illegible]	[illegible]	①	①
50 — 3547						
DG	[illegible]	[illegible]	[illegible]	[illegible]	[illegible]	[illegible]
ecolutions® 3545						
DG	[illegible]	[illegible]	[illegible]	[illegible]	①	①
100 — 3577						
DG	[illegible]	[illegible]	[illegible]	[illegible]	[illegible]	[illegible]
ecolutions® 3575						
DG	[illegible]	[illegible]	[illegible]	[illegible]	①	①

Additional charges:

Exact colour match	[illegible]

Prices include 4-colour process imprint.
Orders must be multiples of the minimum order quantity.
Additional charge for shrink-wrapped pack: [illegible]
① Price under request.

External Packaging:



25 — **250** ± 8,5 Kg



50 — **125** ± 8,2 Kg



100 — **65** ± 8,3 Kg

*The percentage is calculated excluding backsheet

75 X 127 MM NON-ADHESIVE SCRATCH PAD

SCRACT PADS, indispensable for lists and quick notes.

MADE WITH 100% FSC CERTIFIED PAPER
& **100% RECYCLABLE**

MANUFACTURED AND PRINTED IN BIC FACTORIES

3760 / 3761



MOQ 500u.

Decoration:

BIC® 75 X 127 NON-ADHESIVE SCRATCH PAD

A DG: 4-colour process

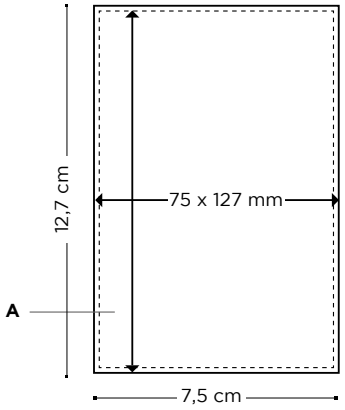

Price DKK

	BIC® 75 X 127 NON-ADHESIVE SCRATCH PAD	500-999	1000-2499	2500-4999	5000-9999	10000-24999	25000-49999
	3760						
20	**DG**	3,80	3,13	1,87	1,42	1,42	1,42
	3761						
40	**DG**	5,67	4,40	2,83	2,54	2,46	2,39

Additional charges:

Exact colour match on pad	783DKK

Prices include 4-colour process imprint.
Orders must be multiples of the minimum order quantity.
Additional charge for shrink-wrapped pack: 0,82DKK

Paper type:

☐ Standard 60g

Printing techniques:



(DG) DIGITAL

External Packaging:



20

400 ± 5,4 Kg



40

200 ± 5,2 Kg

Optional Packaging:
Cello Wrap 1, 2, 3 units

MADE IN SPAIN

96 X 152 MM NON-ADHESIVE SCRATCH PAD

MADE WITH 100% FSC CERTIFIED PAPER
& **100% RECYCLABLE**

MANUFACTURED AND PRINTED IN BIC FACTORIES

3762 / 3763



50%

MOQ 500u.

Decoration:

BIC® 96 X 152 NON-ADHESIVE SCRATCH PAD

A DG: 4-colour process

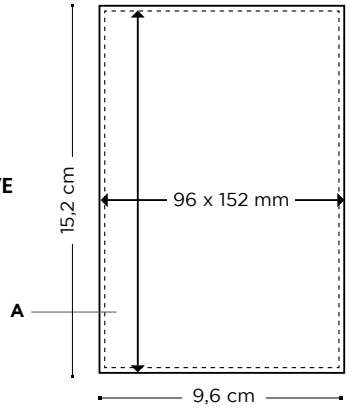

Price (DKK)

	BIC® 96 X 152 NON-ADHESIVE SCRATCH PAD	500-999	1000-2499	2500-4999	5000-9999	10000-24999	25000-49999
	3762						
20	**DG**	4,70	3,88	2,24	1,79	1,79	1,79
	3763						
40	**DG**	7,16	5,67	3,58	3,21	3,13	3,06

Additional charges:

Exact colour match on pad	783DKK

Prices include 4-colour process imprint.
Orders must be multiples of the minimum order quantity.
Additional charge for shrink-wrapped pack: 0,82DKK

Paper type:

☐ Standard 60g

Printing techniques:



(DG)
DIGITAL

External Packaging:



20

350 ± 8,6 Kg



40

200 ± 8 Kg

Optional Packaging:
Cello Wrap 1, 2, 3 units

MADE IN SPAIN

BOOKLETS

The multi-purpose notes tool! Double the impact of your message with a fully personalised cover and Sticky Notes pad.





FLAG BOOKLET

MANUFACTURED AND PRINTED IN BIC FACTORIES



Choose a cover finish for your booklet: brilliant, pattern laminated or matt soft-feel laminated

120%

25 flags of each colour!

Special packaging:

Shrink-wrapped: 10 Booklets

Printing techniques:

(DG)
DIGITAL

MADE IN SPAIN

Decoration:

BIC® FLAG BOOKLET **MOQ 250u.**

A/B DG: 4-colour process

25 3730

25 Flags per color

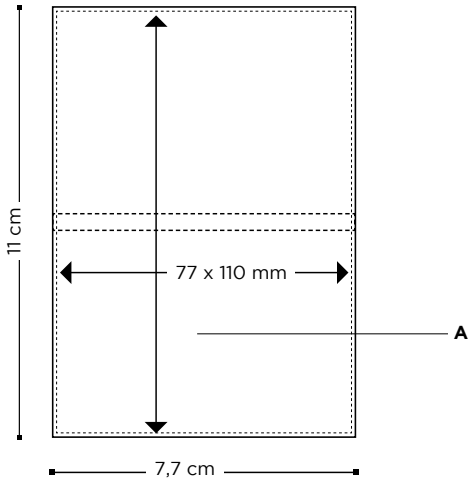

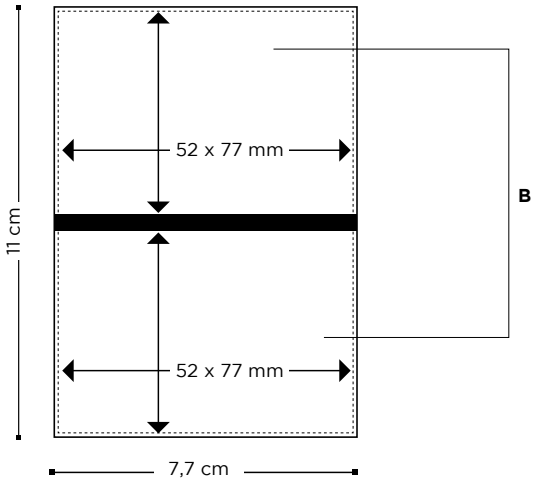

Price (DKK)

BIC® FLAG BOOKLET 3730	250-499	500-999	1000-2499	2500-4999	5000-9999	10000-24999	25000-49999
DG	16,19	13,50	10,44	7,24	6,19	6,04	5,89
Additional charges:							
Printing on Inside cover	0,60	0,52	0,52	0,52	0,45	0,45	0,45
Matt soft-feel/pattern laminated finish	0,60	0,52	0,52	0,52	0,45	0,45	0,45

Orders must be multiples of the minimum order quantity.
BIC® Booklets: Prices include 4-colour process imprint only on the external part of the cover.
Additional charge for shrink-wrapped pack: 0,82DKK

External Packaging:



25

150 ± 1,56 Kg

Optional Packaging:
Cello Wrap 1, 2, 3 units

75 X 75 BOOKLET

ADHESIVE SHEETS MADE WITH 100%
FSC CERTIFIED PAPER & **100% RECYCLABLE**

MANUFACTURED AND PRINTED IN BIC FACTORIES



Paper type:

☐ Standard 80g

Special packaging:

Shrink-wrapped: 10 Booklets

Optional Packaging:
Cello Wrap 1, 2 units

Printing techniques:

(DG) DIGITAL

MADE IN SPAIN

Decoration:

BIC® 75 X 75 BOOKLET
A/B/C/D DG: 4-colour process

MOQ with unimprinted pad: 250u.
MOQ with imprinted pad: 500u.

25 3731
50 3737

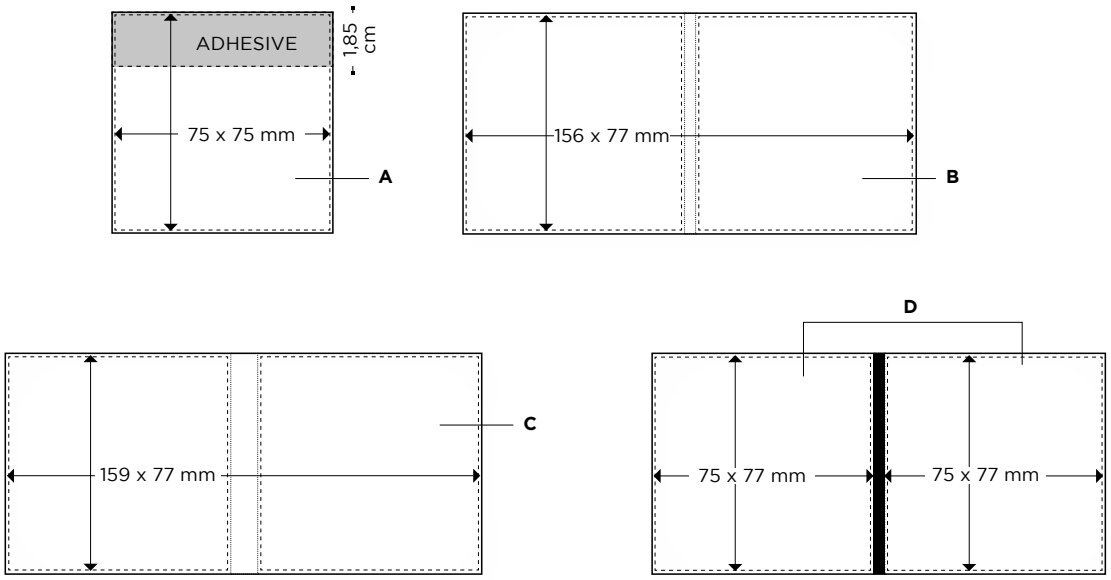

Price (DKK)

	BIC® 75 X 75 BOOKLET	250-499	500-999	1000-2499	2500-4999	5000-9999	10000-24999	25000-49999
25	3731*							
	DG	12,76	10,59	9,55	7,83	7,16	7,01	6,86
50	3737							
	DG	16,11	13,35	11,71	10,07	9,25	9,10	8,95

Additional charges:							
Exact colour match on pad				783DKK			
Printing on pad	0,60	0,52	0,52	0,52	0,45	0,45	0,45
Printing on inside cover	0,60	0,52	0,52	0,52	0,45	0,45	0,45
Matte soft-feel/pattern laminated finish	0,60	0,52	0,52	0,52	0,45	0,45	0,45

Orders must be multiples of the minimum order quantity.
BIC® Booklets: Prices include 4-colour process imprint only on the external part of the cover.
Additional charge for shrink-wrapped pack: 0,82DKK
*<500 units only possible with unprinted BIC® Sticky Notes

External Packaging:



25
500 ± 7,8 Kg



50
250 ± 7,3 Kg

101 X 75 BOOKLET

ADHESIVE SHEETS MADE WITH 100%
FSC CERTIFIED PAPER & **100% RECYCLABLE**

MANUFACTURED AND PRINTED IN BIC FACTORIES



90 %

Double the impact of your message with a fully personalised cover and Sticky Notes pad in the most popular size

Paper type:

☐ Standard 80g

Special packaging:

Shrink-wrapped: 10 Booklets

Optional Packaging:
Cello Wrap 1, 2, 3 units

Printing techniques:



(DG)
DIGITAL

MADE IN SPAIN

Decoration:

BIC® 101 X 75 BOOKLET
E/F/G/H DG: 4-colour process

25 3738 **MOQ** with unimprinted pad: 250u / MOQ with imprinted pad: 500u.

50 3739 **MOQ** with imprinted pad: 250u.

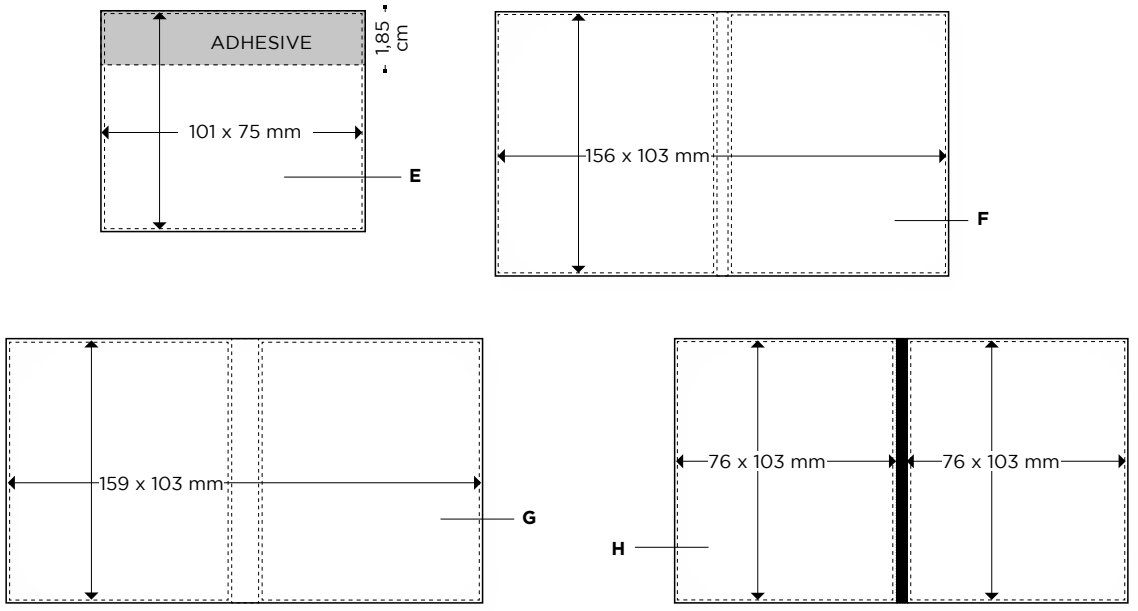

Price (DKK)

BIC® 101 X 75 BOOKLET	250-499	500-999	1000-2499	2500-4999	5000-9999	10000-24999	25000-49999
25 — 3738*							
DG	14,62	12,16	10,67	9,10	8,36	8,21	8,06
50 — 3739							
DG	19,32	16,26	14,25	11,86	10,97	10,74	10,52

Additional charges:							
Exact colour match on pad				783DKK			
Printing on pad	0,60	0,52	0,52	0,52	0,45	0,45	0,45
Printing on inside cover	0,60	0,52	0,52	0,52	0,45	0,45	0,45
Matte soft-feel/pattern laminated finish	0,60	0,52	0,52	0,52	0,45	0,45	0,45

Orders must be multiples of the minimum order quantity.
® Booklets: Prices include 4-colour process imprint only on the external part of the cover.
Additional charge for shrink-wrapped pack: 0,82DKK
*<500 units only possible with unprinted BIC® Sticky Notes

External Packaging:



25
500 ± 5,9 Kg



50
250 ± 5,1 Kg

75 X 75 ADHESIVE NOTEPAD WITH FLAG BOOKLET

ADHESIVE SHEETS MADE WITH 100%
FSC CERTIFIED PAPER & **100% RECYCLABLE**

MANUFACTURED AND PRINTED IN BIC FACTORIES



The multi-purpose notes tool

Paper type:

☐ Standard 80g

Special packaging:

Shrink-wrapped: 10 Booklets

Optional Packaging:
Cello Wrap 1, 2, 3 units

Printing techniques:

(DG)
DIGITAL

MADE IN SPAIN

Decoration:

BIC® ADHESIVE NOTEPAD WITH FLAG BOOKLET

MOQ with unimprinted pad: 250u.
MOQ with imprinted pad: 500u.

A/B/C DG: 4-colour process

25 3732

25 Flags per color

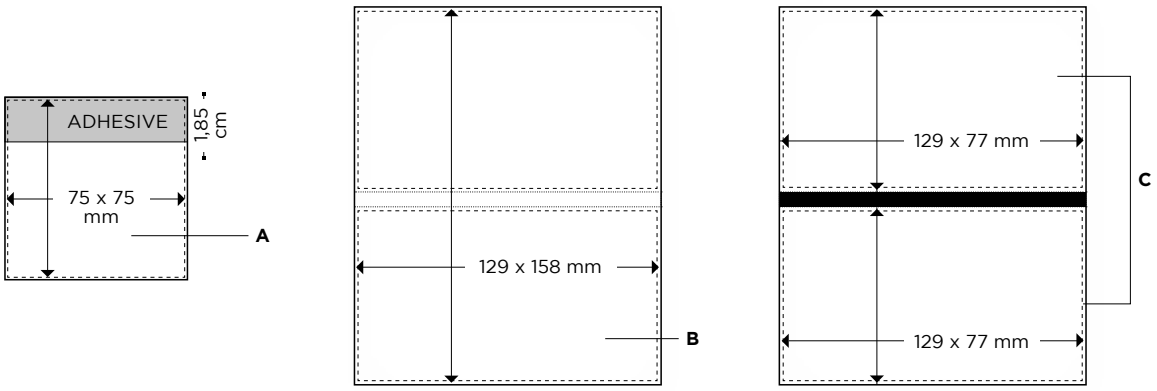

Price (DKK)

BIC® ADHESIVE NOTEPADS WITH FLAG BOOKLET 3732*	250-499	500-999	1000-2499	2500-4999	5000-9999	10000-24999	25000-49999
DG	27,30	22,75	18,65	14,02	12,31	12,09	11,86

Additional charges:

Exact colour match on pad				783DKK			
Printing on pad	0,60	0,52	0,52	0,52	0,45	0,45	0,45
Printing on inside cover	0,60	0,52	0,52	0,52	0,45	0,45	0,45
Matte soft-feel/pattern laminated finish	0,60	0,52	0,52	0,52	0,45	0,45	0,45

Orders must be multiples of the minimum order quantity.
BIC® Booklets: Prices include 4-colour process imprint only on the external part of the cover.
Additional charge for shrink-wrapped pack: 0,82DKK
*<500 units only possible with unprinted BIC® Sticky Notes

External Packaging:



25

200 ± 5,2 Kg

CLIC STIC MINI ORGANISER & BIC® CLIC STIC MINI DIGITAL ORGANISER

ADHESIVE SHEETS MADE WITH 100%
FSC CERTIFIED PAPER & **100% RECYCLABLE**

MANUFACTURED AND PRINTED IN BIC FACTORIES

BIC® CLIC STIC MINI ORGANISER
3735



70 %

Use this all-in-one organiser for meeting and daily notes

This exceptional communication tool includes BIC® Clic Stic Mini Digital pen

BIC® CLIC STIC MINI DIGITAL ORGANISER
3735



Photographic image all around!

CLIC STIC MINI ORGANISER & BIC® CLIC STIC MINI DIGITAL ORGANISER

Standard colours combination

MIX & MATCH

Plug

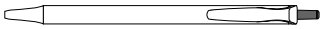

OPAQUE	01	12	10	03	05	20	04	07	18	02
FROSTED	69	63	71	66	68	67	40			

Clip

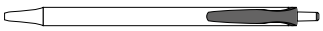



OPAQUE	01	12	10	03	05	20	04	07	18	02
FROSTED	69	63	71	66	68	67	40			



Section



OPAQUE	01	12	10	03	05	20	04	07	18	02
FROSTED	69	63	71	66	68	67	40			

Barrel



OPAQUE 01

Paper type:

☐ Standard 80g

Special packaging:

Shrink-wrapped: 10 Booklets

Optional Packaging:
Cello Wrap 1, 2 units

Printing techniques:



(DG)
DIGITAL

MADE IN SPAIN

MOQ with unimprinted pad: 250u.
MOQ with imprinted pad: 500u.

Decoration:

BIC® CLIC STIC MINI ORGANISER & DIGITAL
3735

A/B/C DG: 4-colour process.
D/E SP: max 1 colour
F DG: full-colour (area for text)
(available in white barrel)
G DG: full-colour (area for images)
(available in white barrel)

20 Adhesive notepad
40 Scratch pad
25 Flags per color

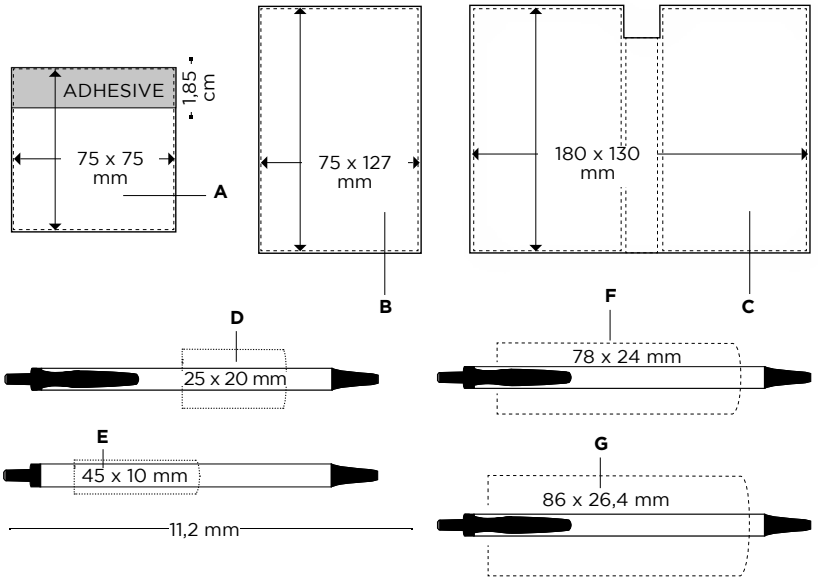

Price(DKK)

BIC® CLIC STIC MINI ORGANISER / MINI DIGITAL ORGANISER	250-499	500-999	1000-2499	2500-4999	5000-9999	10000-24999	25000-49999
DG/SP	38,87	32,30	29,32	25,96	24,10	ⓘ	ⓘ
DG/DG	41,78	34,69	31,41	27,75	26,04	ⓘ	ⓘ

Additional charges:

Exact colour match on pad				783DKK			
Printing on pad	0,60	0,52	0,52	0,52	0,45	0,45	0,45
Printing on inside cover	0,60	0,52	0,52	0,52	0,45	0,45	0,45
Matte soft-feel/pattern laminated finish	0,60	0,52	0,52	0,52	0,45	0,45	0,45

Orders must be multiples of the minimum order quantity.
® Booklets: Prices include 4-colour process imprint only on the external part of the cover.
Additional charge for shrink-wrapped pack: 0,82DKK
ⓘ Price under request.

External Packaging:



125 ± 7 Kg

150 X 150 MM BOOKLET ORGANISER

ADHESIVE SHEETS MADE WITH 100%
FSC CERTIFIED PAPER & **100% RECYCLABLE**

MANUFACTURED AND PRINTED IN BIC FACTORIES



Create a unique notepad with this large format!

Paper type:

☐ Standard 80g

Special packaging:

Shrink-wrapped: 10 Booklets

Printing techniques:



(DG) DIGITAL

MADE IN SPAIN

Decoration:

BIC® 150 X 150 BOOKLET ORGANISER **MOQ 500u.**

A/B/C DG: 4-colour process

100 3745

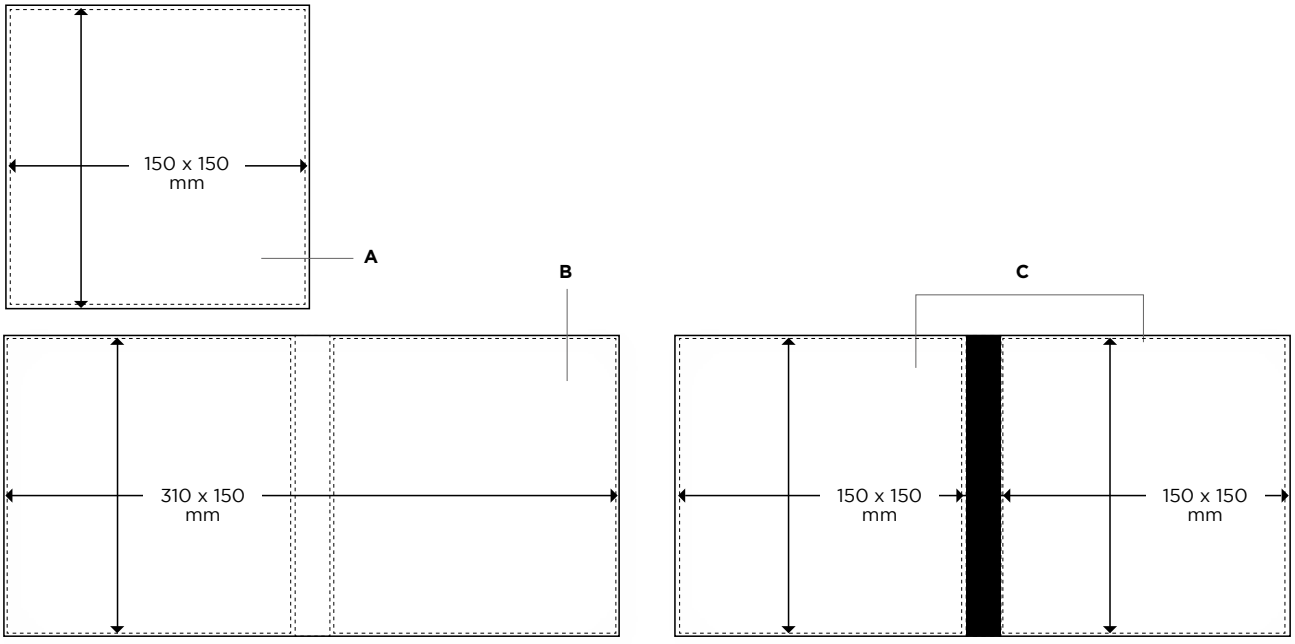

Price (DKK)

BIC® 150 X 150 BOOKLET ORGANISER 3745	500-999	1000-2499	2500-4999	5000-9999	10000-24999	25000-49999
DG	38,05	35,36	31,71	29,54	ⓘ	ⓘ

Additional charges:						
Exact colour match on pad			783DKK			
Printing on pad	0,52	0,52	0,52	0,45	0,45	0,45
Printing on inside cover	0,52	0,52	0,52	0,45	0,45	0,45
Matte soft-feel/pattern laminated finish	0,52	0,52	0,52	0,45	0,45	0,45

Orders must be multiples of the minimum order quantity.
® Booklets: Prices include 4-colour process imprint only on the external part of the cover.
Additional charge for shrink-wrapped pack: 0,82DKK
ⓘ Price under request.

External Packaging:



40 ± 6,4 Kg

150 X 150 MM BOOKLET WITH PEN LOOP

ADHESIVE SHEETS MADE WITH 100%
FSC CERTIFIED PAPER & **100% RECYCLABLE**

MANUFACTURED AND PRINTED IN BIC FACTORIES

3746



Price (DKK)

BIC® 150 X 150 BOOKLET WITH PEN LOOP	500-999	1000-2499	2500-4999	5000-9999	10000-24999	25000-49999
3746						
DG	45,28	42,22	37,60	35,21	ⓘ	ⓘ
Ballpen 1080						
DG	10,07	9,33	8,73	8,21	ⓘ	ⓘ

Additional charges:

Exact colour match on pad			783DKK			
Printing on pad	0,52	0,52	0,52	0,45	0,45	0,45
Printing on inside cover	0,52	0,52	0,52	0,45	0,45	0,45
Matte soft-feel/pattern laminated finish	0,52	0,52	0,52	0,45	0,45	0,45

Orders must be multiples of the minimum order quantity.
BIC® Booklets: Prices include 4-colour process imprint only on the external part of the cover.
Additional charge for shrink-wrapped pack: 0,82DKK
Pen not included.
ⓘ Price under request.

Paper type:

☐ Standard 80g

Special packaging:

Shrink-wrapped: 10 Booklets

Optional Packaging:
Cello Wrap 1, 2, 3 units

Printing techniques:



(DG)
DIGITAL

External Packaging:



40 ± 6,7 Kg

MADE IN SPAIN

Decoration: **MOQ 500u.**

BIC® 150 X 150 BOOKLET WITH PEN LOOP
A/B/C DG: 4-colour process
D/F SP: max. 2 col.
E/I SP: max. 1 col.
G DG: full-colour (area for images)
H DG: full-colour (area for text)

100 3746

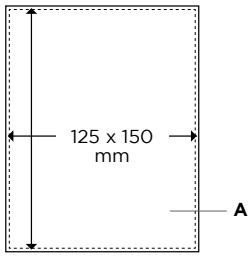

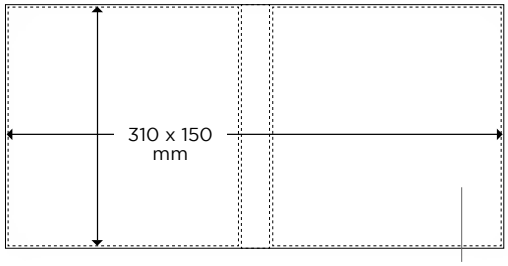

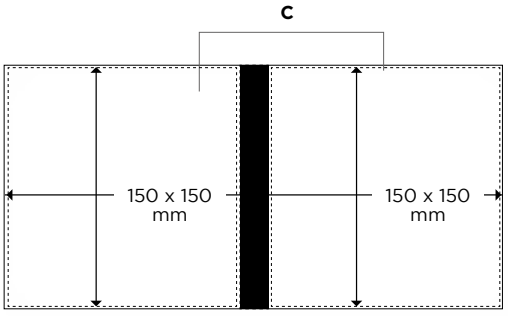

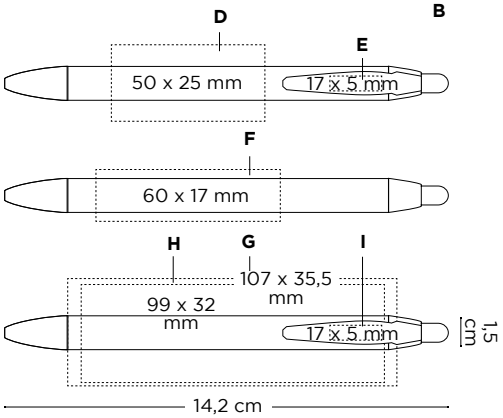

Standard colours combination

Barrel



OPAQUE 01

Plug

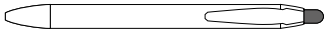

OPAQUE 01 03 07 18 02

FROSTED 69 63 71 66 68 67 40

Clip



OPAQUE 01 03 07 18 02

FROSTED 69 63 71 66 68 67 40

Section



OPAQUE 01 03 07 18 02

FROSTED 69 63 71 66 68 67 40

BIC® NOTEBOOKS DUAL A5 INNER NOTEPAD

MOQ 50u.

Use the inner notepad to refill your Dual Cover, or as a notebook itself!

Decoration:

Inner notepad 3724
D SP: max. 1 col.
E DB/HS: max. 1 col.

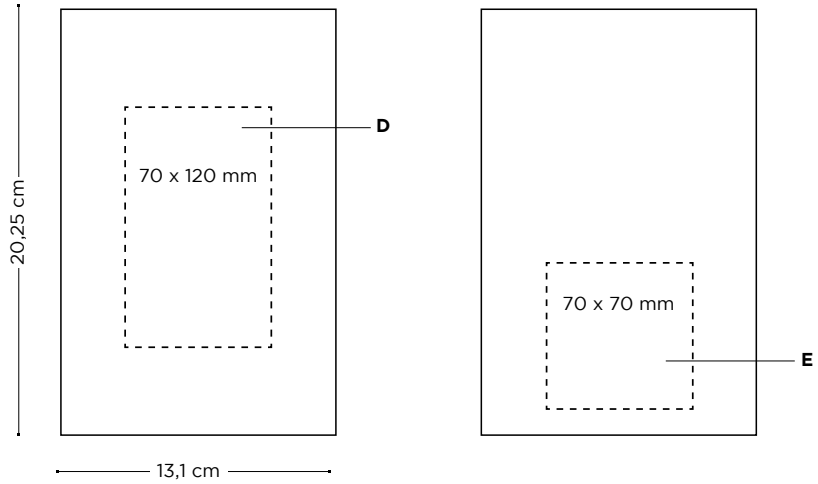

Price (DKK)

BIC® Notebooks Dual A5 Inner notepad 3724	50-99	100-249	250-499	500-999	1000-2499	2500-4999	5000-9999
SP	40,51	37,52	35,73	34,39	32,97	ⓘ	ⓘ
DB/HS	47,22	43,79	41,78	40,21	38,57	ⓘ	ⓘ

Prices include one imprint in one position according to specified technique.
ⓘ Price under request.

Paper type:

80 Standard 80g
80 Standard 80g

Printing techniques:


(SP) SCREEN PRINTING


(DB) DEBOSSING


(HS) HOT STAMPING

External packaging:


55 ± 10,7 Kg