BIC graphic

Your Brand Ambassador

Let’s continue writing a more sustainable future

2 0 2 0

BIC Graphic helps you to promote your brand with sustainable materials

ecolutions®

The Ecolutions® range is created based on 3 sustainable materials

1

RECYCLED RECYCLABLE

The plastic of our products is reprocessed from recovered material from industries or products. They are collected, processed and returned to use in the form of raw materials or products

2

BIO

Plastic designed to degrade under industrial or domestic compost conditions

3

Packaging from recycled cardboard

4

FSC FOREST STEWARDSHIP COUNCIL

THE TOP PRIORITY OF THE BIC® MEDIA CLIC BIO ECOLUTIONS® LIFE CYCLE IS SUSTAINABILITY

BIODEGRADABLE PEN:

No ink left in the pen?
No problem, it's compostable.
The barrel is **100% biodegradable** while the clip is **100% recyclable.**

BIO-BASED MATERIAL:

The barrel is made from **70% bio-based material**.

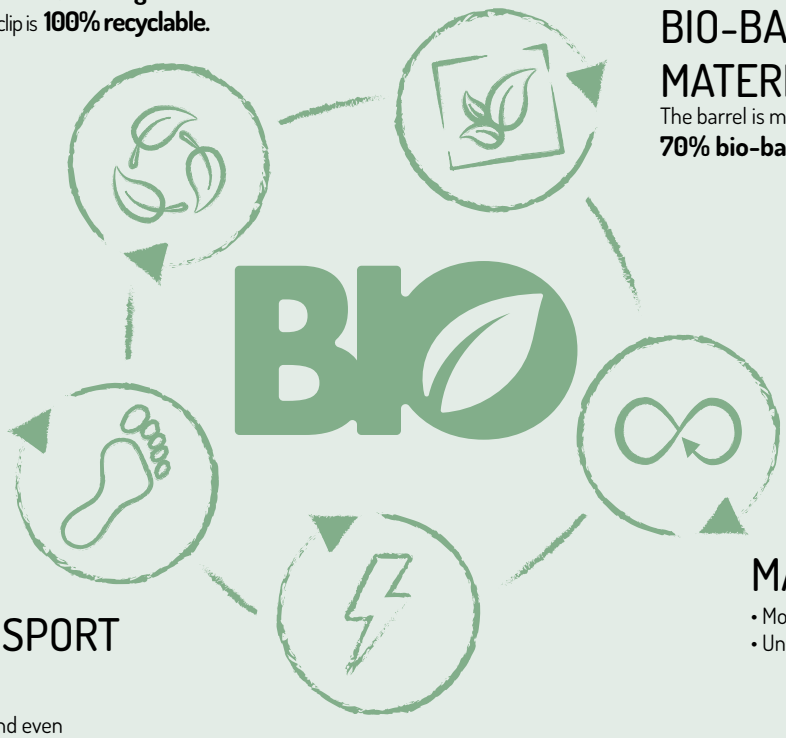

MADE TO LAST:

- More than **10,000 clicks**
- Unbreakable clip

LOW TRANSPORT IMPACT:

Production, printing and even **raw materials made in Europe**

RENEWABLE ENERGY:

Produced in our factory and printing facilities which are both powered with **100% renewable electricity.**

BIO New!

MADE FROM 70% OF BIO-SOURCED* &
100% BIODEGRADABLE MATERIAL

Made from sugar cane.

MIX & MATCH

MANUFACTURED AND PRINTED IN BIC FACTORIES

BIC® MEDIA CLIC BIO
ecolutions®
Opaque Ballpen - 1972

01BIO 012BIO 03BIO 05BIO 04BIO 02BIO

Colour ink

Red Ink available under request

*The percentage is calculated on total weight of barrel, biodegradable under industrial conditions

MOQ 500u.

Standard colours combination

Plug

OPAQUE 01 12 10 03 5C 13 2D 84 85 5G 05 3D 83 04 07 18 02 FROSTED 69

Clip

OPAQUE 01 12 10 03 5C 13 2D 84* 85* 5G 05 3D 83* 04 07 18 02 FROSTED 69

Barrel

OPAQUE 01BIO 012BIO 03BIO 05BIO 04BIO 02BIO

BIC® MEDIA CLIC BIO
ecolutions®
1972
A SP: max. 4 col.
B SP: max. 2 col.

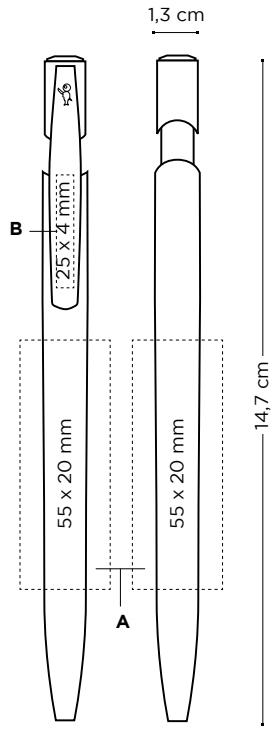

Price (DKK)

BIC® MEDIA CLIC BIO ecolutions® 1972	500-999	1000-2499	2500-4999	5000-9999	10000-24999	25000-49999
SP	0,66	0,32	0,90	0,55	0,53	0,53

Additional imprint charge per colour & position

SP	0,47	0,47	0,47	0,25	0,28	0,28

Prices include 1 colour screenprint in one position.

Writing modes:

Ballpen

M

*until stock lasts

Printing techniques:

(SP)
SCREEN
PRINTING

New optional special packaging:

ECO Sleeve / Plastic Pouch / Window Box

+ INFO pag. 41

External packaging:

500 ± 4,3 Kg

MADE IN SPAIN

Ecological products

MEDIA CLIC ecolutions®

48h**

Made from the scrap of car parts.

MADE FROM 92% OF RECYCLED MATERIAL* & **100% RECYCLABLE**

BIC® MEDIA CLIC ecolutions®
Opaque
Ballpen 1E25
Pencil 1E28

1E

3E

MADE FROM 50% OF RECYCLED MATERIAL* & **100% RECYCLABLE**

BIC® MEDIA CLIC GRIP ecolutions®
Opaque
Ballpen 1E20
Pencil 1E21

01/12 01/03 01/05 01/02

01/07

*The percentage is calculated on total weight of barrel

**48h not available in Digital finishes

Digital Printing!

MIX & MATCH

MANUFACTURED AND PRINTED IN BIC FACTORIES

MADE FROM 50% OF RECYCLED MATERIAL* &
100% RECYCLABLE

BIC® MEDIA CLIC DIGITAL
ecolutions®
Opaque
Ballpen 1E25
Pencil 1E28

01

Only available in white barrel

01

100%

MADE FROM 50% OF RECYCLED MATERIAL* &
100% RECYCLABLE

BIC® MEDIA CLIC GRIP DIGITAL
ecolutions®
Opaque
Ballpen 1E20
Pencil 1E21

01/05

Only available in white barrel

01/12

100%

Ecological products

MOQ 500u.

Standard colours combination ecolutions® Standard colours combination

Plug

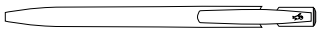

OPAQUE 01 12 10 03 5C 2D 13 84* 85* 5G 05 3D 83* 04 07 18 02 FROSTED 69

Clip

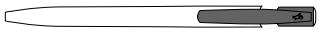

OPAQUE 01 12 10 03 5C 2D 13 84* 85* 5G 05 3D 83* 04 07 18 02 FROSTED 69

Barrel

OPAQUE 1E 3E

Barrel & Grip OPAQUE

01/12 01/03 01/05 01/07 01/02

Add the Möbius loop to your artwork at no additional charge. Please specify it on your order. (Möbius loop imprint defaults to left-hand hand corner.)

Exact colour match:

≥ 10.000 units 1E25/1E28 1E20/1E21

≥ 20.000 units 1E20 digital/1E21 digital

Writing modes:

Ballpen

M

Mechanical pencil

MP
Ø0,7mm

*Until stock lasts

Printing techniques:

(SP) SCREEN PRINTING

(DG) DIGITAL

Decoration:

BIC® MEDIA CLIC

ecolutions® 1E25 (ballpen)
ecolutions® 1E28 (pencil)

A SP: max. 4 col.
B SP: max. 2 col.
C DG: full-colour

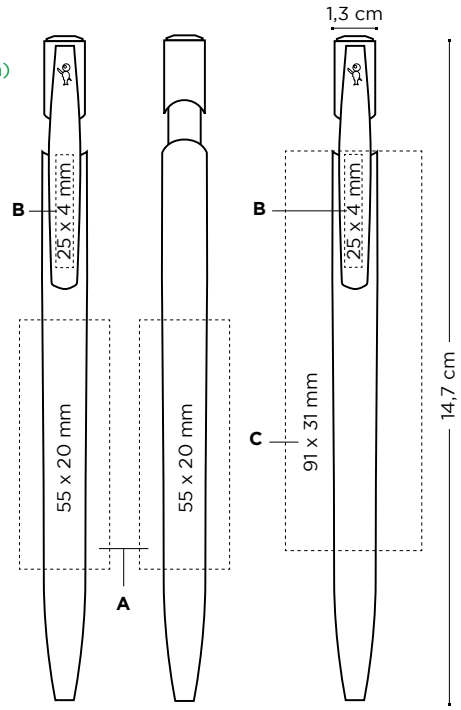

BIC® MEDIA CLIC GRIP

ecolutions® 1E20 (ballpen)
ecolutions® 1E21 (pencil)

D SP: max. 4 col.
E SP: max. 2 col.
F DG: full-colour

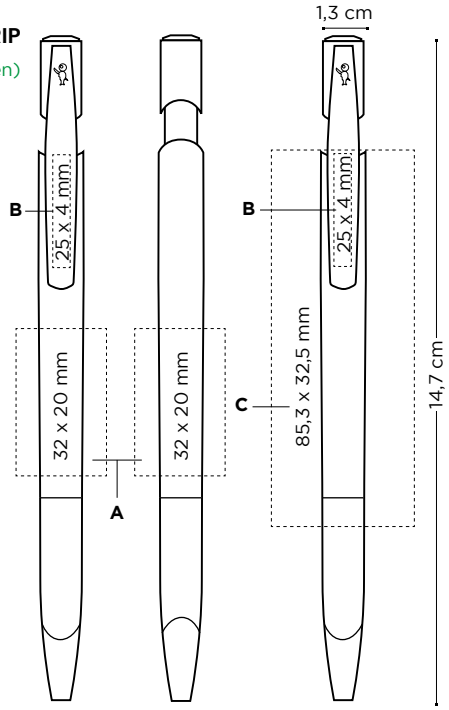

Price (DKK)

BIC® MEDIA CLIC	500-999	1000-2499	2500-4999	5000-9999	10000-24999	25000-49999
ecolutions® 1E25 (ballpen)						
SP	0,60	0,46	0,39	0,38	0,35	0,32
DG	0,82	0,68	0,59	0,57	ⓘ	ⓘ
ecolutions® 1E28 (pencil)						
SP	0,59	0,55	0,52	0,50	0,46	0,43
DG	0,90	0,78	0,70	0,66	ⓘ	ⓘ
Additional imprint charge per colour & position						
SP	0,37	0,37	0,37	0,25	0,13	0,13

Prices include one imprint in one position according to specified technique.
ⓘ Price under request.

Price (DKK)

BIC® MEDIA CLIC GRIP	500-999	1000-2499	2500-4999	5000-9999	10000-24999	25000-49999
ecolutions® 1E20 (ballpen)						
SP	0,90	0,74	0,69	0,65	0,62	0,56
DG	1,05	0,92	0,89	0,82	ⓘ	ⓘ
ecolutions® 1E21 (pencil)						
SP	0,90	0,85	0,85	0,82	0,80	0,78
DG	1,29	1,02	0,96	0,90	ⓘ	ⓘ
Additional imprint charge per colour & position						
SP	0,37	0,37	0,37	0,25	0,13	0,13

Prices include one imprint in one position according to specified technique.
ⓘ Price under request.

External packaging:

500 ± 4,1 Kg

New optional special packaging:

ECO Sleeve / Plastic Pouch / Window Box

+ INFO pag. 41

External packaging:

500 ± 4,3 Kg

Check out the video

MADE IN SPAIN

BIC® ROUND STIC® ecolutions®

48h**

MADE FROM 94% OF RECYCLED MATERIAL* & **100% RECYCLABLE**

Made from the scrap of fruit and vegetable trays.

MIX & MATCH

MANUFACTURED AND PRINTED IN BIC FACTORIES

Digital Printing!

BIC® ROUND STIC® ecolutions® Opaque - 1E10

1E/8E 1E/7E 1E/10E 1E/3E

100%

BIC® ROUND STIC® ecolutions® Frosted - 1E10

2E/8E 2E/7E 2E/10E 2E/3E

100%

BIC® ROUND STIC® DIGITAL ecolutions® Opaque - 1E10

1E/10E 1E/8E

100%

*The percentage is calculated on total weight of product excluding cartridge

**48h not available in Digital finishes

MOQ 500u.

ecolutions® Standard colours combination

Add the Möbius loop to your artwork at no additional charge. Please specify it on your order. (Möbius loop imprint defaults to left-hand hand corner.)

Plug

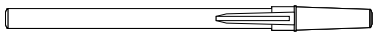

8E 7E 10E 3E

Clip

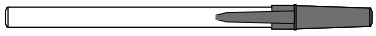

8E 7E 10E 3E

Section

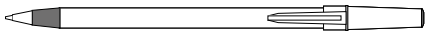

8E 7E 10E 3E

Barrel

OPAQUE FROSTED

1E 2E

Exact colour match:

≥ 10.000 units

Decoration:

BIC® ROUND STIC®
ecolutions® 1E10
A SP: max. 3 col.
B SP: max. 1 col.
C DG: full-colour (available in white barrel)

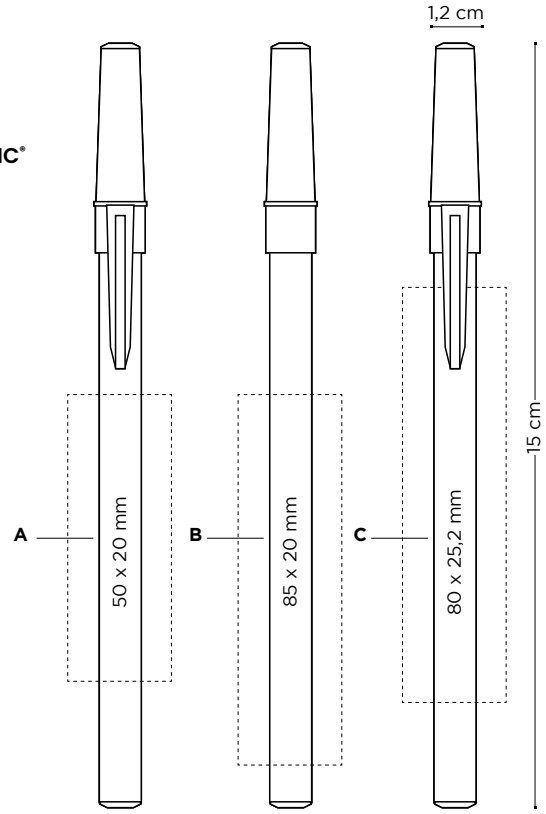

Price (DKK)

BIC® ROUND STIC® ecolutions® 1E10	500-999	1000-2499	2500-4999	5000-9999	10000-24999	25000-49999
SP	0,20	0,18	0,16	0,15	0,14	0,13
DG	0,99	0,96	0,93	0,90	ⓘ	ⓘ

Additional imprint charge per colour & position

SP	0,37	0,37	0,37	0,36	0,34	0,32

Prices include one imprint in one position according to specified technique.
ⓘ Price under request.

Writing modes:

Ballpen

M

Printing techniques:

(SP) SCREEN PRINTING

(DG) DIGITAL

New optional special packaging:

ECO Sleeve / Plastic Pouch

+ INFO pag. 41

External packaging:

500 ± 2,5 Kg

MADE IN SPAIN

CLIC STIC ecolutions®

48h**

MADE FROM 78% OF RECYCLED MATERIAL* & **100% RECYCLABLE**

Made from the scrap of fruit and vegetable trays.

MIX & MATCH

MANUFACTURED AND PRINTED IN BIC FACTORIES

Digital Printing!

BIC® CLIC STIC ecolutions®
Opaque - 1E00

1E/8E 1E/7E 1E/3E

1E/10E

BIC® CLIC STIC ecolutions®
Frosted - 1E00

2E/8E 2E/7E 2E/3E

2E/10E

*The percentage is calculated exluding backsheet

BIC® CLIC STIC DIGITAL
Opaque
1E00

01

*The percentage is calculated on total weight of product excluding cartridge and spring

**48h not available in Digital finishes

MOQ 500u.

ecolutions® Standard colours combination

Add the Möbius loop to your artwork at no additional charge. Please specify it on your order. (Möbius loop imprint defaults to left-hand hand corner.)

Plug

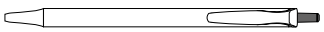

OPAQUE 01 12 10 03 05 20 04 07 18 02

FROSTED 69 63 71 66 68 67 40

Clip

OPAQUE 8E 7E 10E 3E

Section

OPAQUE 8E 7E 10E 3E

Barrel

OPAQUE 1E FROSTED 2E

Decoration:

BIC® CLIC STIC
ecolutions® 1E00

A SP: max. 3 col.
B SP: max. 1 col.
C SP: max. 2 col.
D DG: full-colour (area for text) (available in white barrel)
E DG: full-colour (area for images) (available in white barrel)

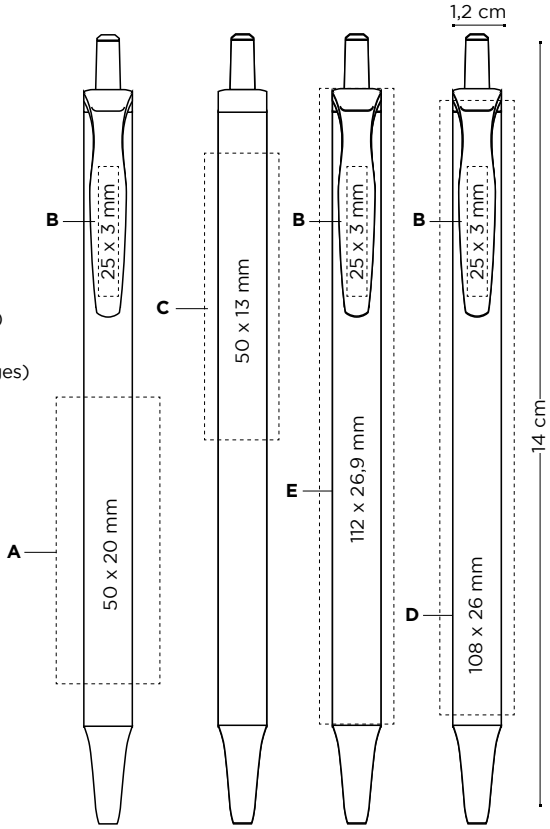

Exact colour match:

≥ 10.000 units

Price (DKK)

BIC® CLIC STIC ecolutions® 1E00	500-999	1000-2499	2500-4999	5000-9999	10000-24999	25000-49999
SP	6,69	6,08	4,90	4,53	4,32	4,08
DG	10,90	8,93	6,85	6,54	ⓘ	ⓘ

Additional imprint charge per colour & position

SP	0,57	0,57	0,57	0,25	0,13	0,13

Prices include one imprint in one position according to specified technique.
ⓘ Price under request.

Writing modes:

Ballpen

M

Printing techniques:

(SP) SCREEN PRINTING

(DG) DIGITAL

New optional special packaging:

ECO Sleeve / Plastic Pouch

+ INFO pag. 41

External packaging:

500 ± 2,9 Kg

MADE IN SPAIN

SUPER CLIP ecolutions®

48h**

MADE FROM 83% OF RECYCLED MATERIAL* & **100% RECYCLABLE**

Made from the scrap of car parts.

MANUFACTURED AND PRINTED IN BIC FACTORIES

BIC® SUPER CLIP ecolutions®
Opaque
1E50

01/1E

MOQ 500u.

ecolutions® Standard colours combination

01

1E

Exact colour match:

≥ 10.000 units

Add the Möbius loop to your artwork at no additional charge. Please specify it on your order. (Möbius loop imprint defaults to left-hand hand corner.)

*The percentage is calculated on total weight of product excluding cartridge and spring

**48h not available in Digital finishes

Decoration:

BIC® SUPER CLIP
1039
ecolutions® 1E50
A SP: max. 2 col.
B SP: max. 1 col.
C DG: full-colour
D BP: full-colour
BP Texture: full-colour

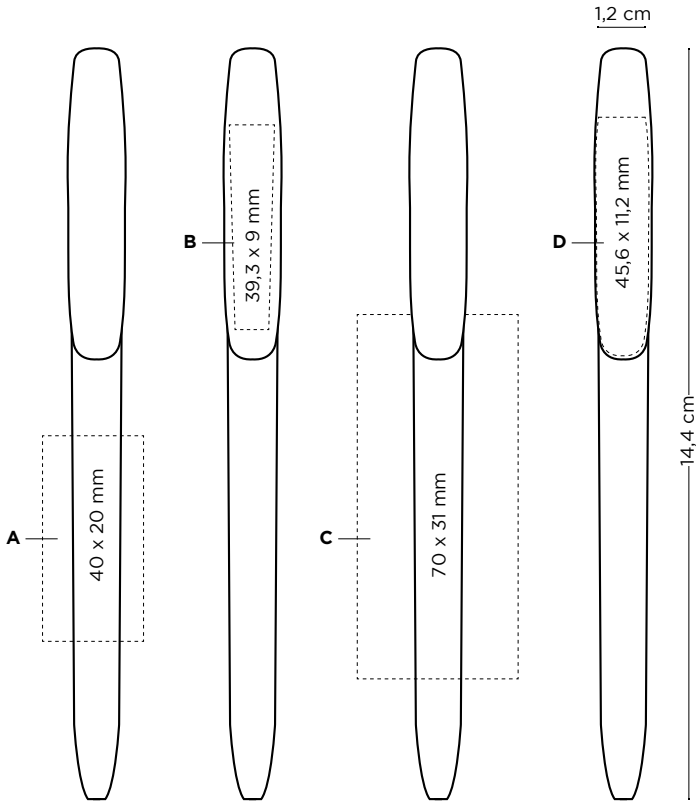

Price (DKK)

BIC® SUPER CLIP ecolutions® 1E50	250-499	500-999	1000-2499	2500-4999	5000-9999	10000-24999	25000-49999
SP	[illegible]	[illegible]	[illegible]	[illegible]	[illegible]	[illegible]	[illegible]
DG	[illegible]	[illegible]	[illegible]	[illegible]	[illegible]	ⓘ	ⓘ
BP	[illegible]	[illegible]	[illegible]	[illegible]	[illegible]	[illegible]	[illegible]

Additional imprint charge per colour & position

SP	[illegible]	[illegible]	[illegible]	[illegible]	[illegible]	[illegible]	[illegible]
BP	[illegible]	[illegible]	[illegible]	[illegible]	[illegible]	ⓘ	ⓘ
***BP Texture**	[illegible]	[illegible]	[illegible]	[illegible]	[illegible]	[illegible]	[illegible]

Prices include one imprint in one position according to specified technique.
ⓘ Price under request.

Writing modes:

Ballpen

M

Printing techniques:

(SP) SCREEN PRINTING

(DG) DIGITAL

(BP) britePix™

New optional special packaging:

ECO Sleeve / Plastic Pouch / Window Box

+ INFO pag. 41

External packaging:

250 ± 2,6 Kg

MADE IN SPAIN

WIDE BODY™ ecolutions®

48h**

MADE FRO 94% OF RECYCLED MATERIAL* & **100% RECYCLABLE**

Made from the scrap of fruit and vegetable trays.

MIX & MATCH

MANUFACTURED AND PRINTED IN BIC FACTORIES

Digital Printing!

BIC® WIDE BODY™ ecolutions®
Opaque - 1E80

1E

BIC® WIDE BODY™ DIGITAL
Opaque
1E80

03

*The percentage is calculated on total weight of barrel

**48h not available in Digital finishes

MOQ 250u.

ecolutions® Standard colours combination

Add the Möbius loop to your artwork at no additional charge. Please specify it on your order. (Möbius loop imprint defaults to left-hand hand corner.)

Plug

OPAQUE 01 03 07 18 02

FROSTED 69 63 71 66 68 67 40

Clip

OPAQUE 01 03 07 18 02

FROSTED 69 63 71 66 68 67 40

Barrel

OPAQUE 1E

Section

OPAQUE 01 03 07 18 02

FROSTED 69 63 71 66 68 67 40

Decoration:

BIC® WIDE BODY™
ecolutions® 1E80
A/C SP: max. 2 col.
B/F SP: max. 1 col.
D DG: full-colour (area for images)
E DG: full-colour (area for text)

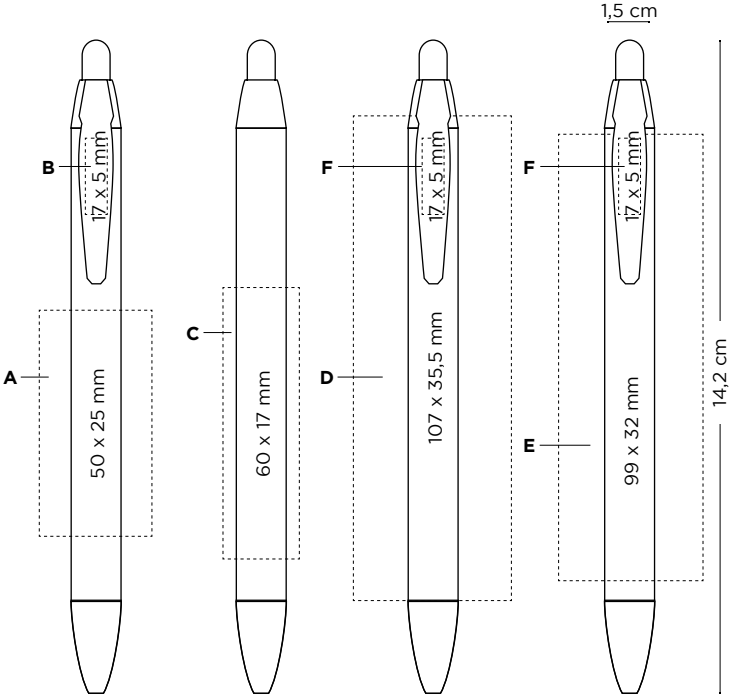

Price (DKK)

BIC® WIDE BODY™ ecolutions® 1E80	250-499	500-999	1000-2499	2500-4999	5000-9999	10000-24999	25000-49999
SP	[illegible]	[illegible]	[illegible]	[illegible]	[illegible]	ⓘ	ⓘ
DG	-	[illegible]	[illegible]	[illegible]	[illegible]	ⓘ	ⓘ

Additional imprint charge per colour & position

SP	[illegible]	[illegible]	[illegible]	[illegible]	[illegible]	ⓘ	ⓘ

Prices include one imprint in one position according to specified technique.
ⓘ Price under request.

Exact colour match:

≥ 10.000 units ≥ 25.000 units for custom made Section

Writing modes:

Ballpen

M

Printing techniques:

(SP) SCREEN PRINTING

(DG) DIGITAL

New optional special packaging:

ECO Sleeve / Plastic Pouch / Window Box

+ INFO pag. 41

External packaging:

250 ± 2,6 Kg

MADE IN SPAIN

BIC® MATIC® ecolutions®

48h

MADE FROM 65% OF RECYCLED MATERIAL* & **100% RECYCLABLE**

Made from pharmaceutical waste.

MANUFACTURED AND PRINTED IN BIC FACTORIES

BIC® MATIC® ecolutions®
Opaque - 1E40

01/01 | 12/12 | 03/03 | 59/8C | 04/8C | 07/07 | 06/8C | 02/02

100%

*The percentage is calculated on total weight of the product

Add the Möbius loop to your artwork at no additional charge. Please specify it on your order. (Möbius loop imprint defaults to left-hand hand corner.)

MOQ 500u.

Decoration:

BIC® MATIC®
ecolutions® 1E40
A SP: max. 1 col. (not available for BIC® Matic® Quartz)
B/C SP: max. 2 col.

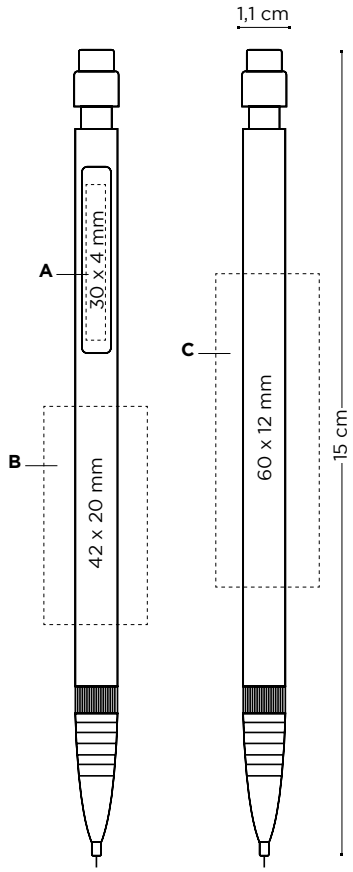

Price (DKK)

BIC® MATIC® ecolutions® 1E40	500-999	1000-2499	2500-4999	5000-9999	10000-24999	25000-49999
SP	0,60	0,59	0,90	0,53	0,52	0,88

Additional imprint charge per colour & position

SP	0,37	0,37	0,37	0,32	0,31	0,31

Prices include 1 colour screenprint in one position.

Writing modes:

Mechanical pencil

MP
Ø0,7mm

Printing techniques:

(SP)
SCREEN PRINTING

New optional special packaging:

ECO Sleeve / Plastic Pouch

+ INFO pag. 41

External packaging:

500 ± 3,1 Kg

MADE IN FRANCE

Digital Printing!

Made from recycled fridges and yogurt pots.

1150

MADE FROM 50% OF RECYCLED MATERIAL*

1151

MADE FROM 46% OF RECYCLED MATERIAL*

DIGITAL
Graphite pencil cut end - 1150

01

METALLIC DIGITAL
Graphite pencil cut end - 1962

47

DIGITAL
Graphic pencil with eraser - 1151

01

METALLIC DIGITAL
Graphic pencil with eraser - 1960

47

*The percentage is calculated on total weight of the product

MOQ 500u.

Standard colours combination

Eraser

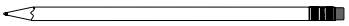

OPAQUE 01

COLOUR CONNECTION 01 12 10 14 59 07 02

Ferrule

OPAQUE 47 26 2C 34 02

Barrel

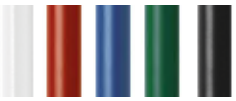

OPAQUE 01 03 04 20 02

Metallic

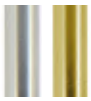

OPAQUE 47 26

GRAPHITE PENCIL CUT END:

MADE FROM 54% OF RECYCLED MATERIAL*

Add the Möbius loop to your artwork at no additional charge. Please specify it on your order. (Möbius loop imprint defaults to left-hand hand corner.)

Writing modes:

PC
HB Ø 2,3mm

Printing techniques:

(SP) SCREEN PRINTING

(DG) DIGITAL

New optional special packaging:

Plastic Pouch x3 units

+ INFO pag. 41

External packaging:

500 ± 3,5 Kg

MADE IN FRANCE

BIC® EVOLUTION® ecolutions®
PENCIL WITH CUT END
1150

BIC® EVOLUTION® ecolutions®
PENCIL WITH ERASER
1151

A SP: max. 1 col.
B SP: max. 2 col.

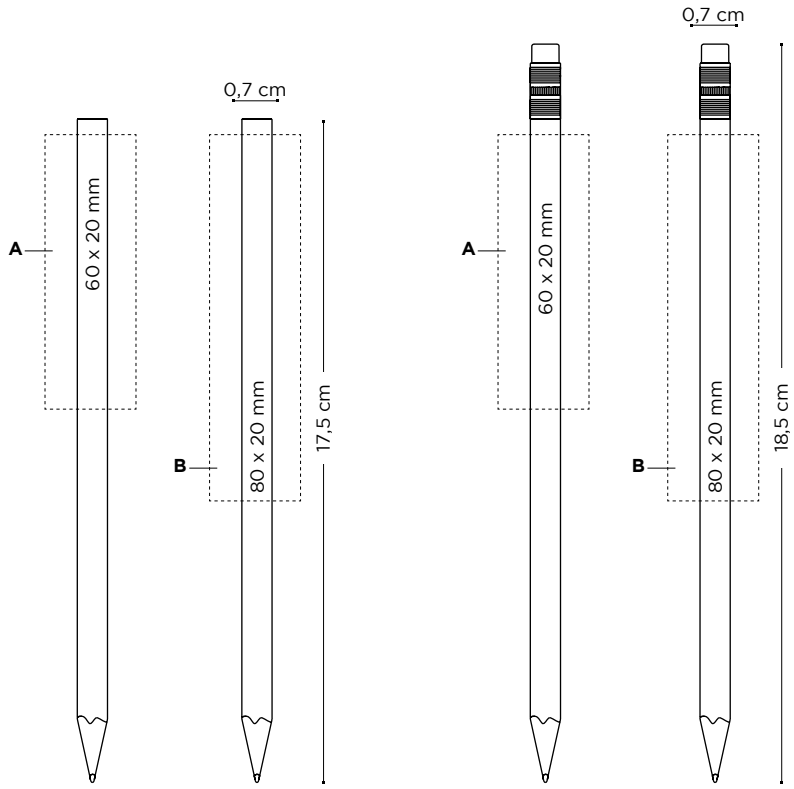

Price (DKK)

BIC® EVOLUTION® ecolutions®	500-999	1000-2499	2500-4999	5000-9999	10000-24999	25000-49999
PENCIL WITH CUT END / 1150						
SP	0,58	0,52	0,48	0,45	0,44	0,40
PENCIL WITH ERASER / 1151						
SP	0,76	0,69	0,86	0,55	0,53	0,53
Additional imprint charge per colour & position						
SP	0,37	0,37	0,37	0,33	0,33	0,33

Prices include 1 colour screenprint in one position.

External packaging:

500 ± 3,5 Kg

MADE IN FRANCE

BIC® EVOLUTION® ecolutions®
PENCIL WITH CUT END
1150 Digital
1962 Metallic Digital

BIC® EVOLUTION® ecolutions®
PENCIL WITH ERASER DIGITAL
1151
PENCIL WITH ERASER
METALLIC DIGITAL
1960

A DG: full-colour (area for images)
B DG: full-colour (area for text)

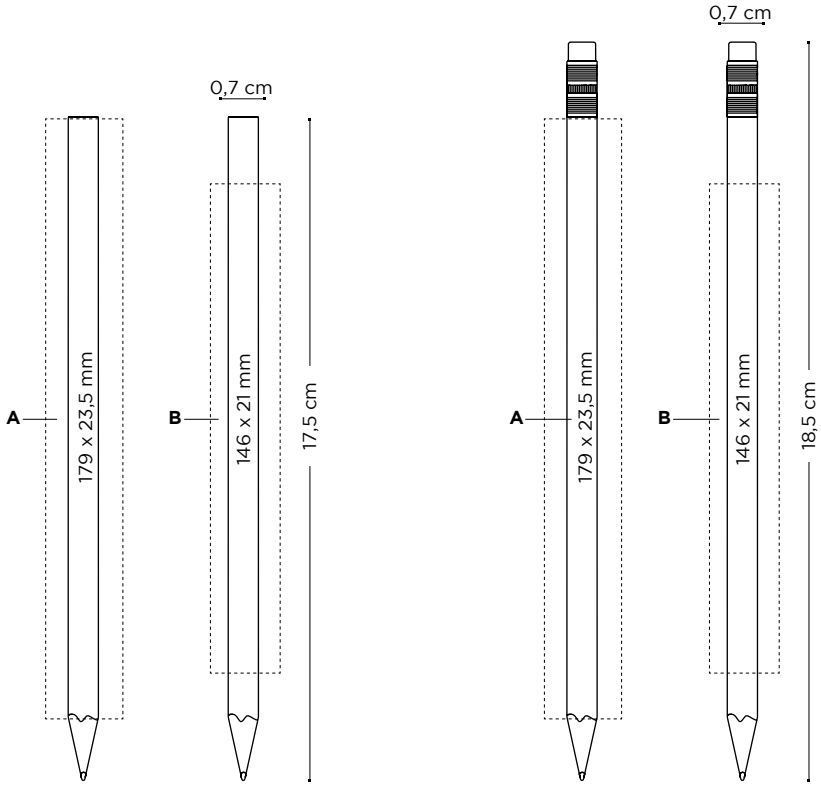

Price (DKK)

BIC® EVOLUTION® ecolutions®	500-999	1000-2499	2500-4999	5000-9999	10000-24999	25000-49999
PENCIL WITH CUT END DIGITAL / 1150						
DG	0,88	0,86	0,84	0,50	i	i
PENCIL WITH CUT END METALLIC / 1962						
DG	6,51	6,39	5,00	0,86	i	i
PENCIL WITH ERASER DIGITAL / 1151						
DG	10,39	9,93	9,85	6,82	i	i
PENCIL WITH ERASER METALLIC DIGITAL / 1960						
DG	11,85	11,52	10,58	9,80	i	i

Prices include digital imprint on barrel.
i Price under request.

Now you can have it on set!

New optional special packaging:

Plastic Pouch
(x3 units)

+ INFO pag. 41

External packaging:

1151/1150/1960

500 ± 3,5 Kg

1962

500 ± 2,6 Kg

MADE IN FRANCE

Sprout GRAPHITE PENCIL - MULTI COLOURED PENCIL

53062

53070 New! 1 plantable pencil - 4 colours!

Combine options!

1. Choose between 10 different seeds
2. Customize your pencil
3. Add a card with planting instructions

standard cardboard

customizable carboard!

Standard barrel

Customized barrel

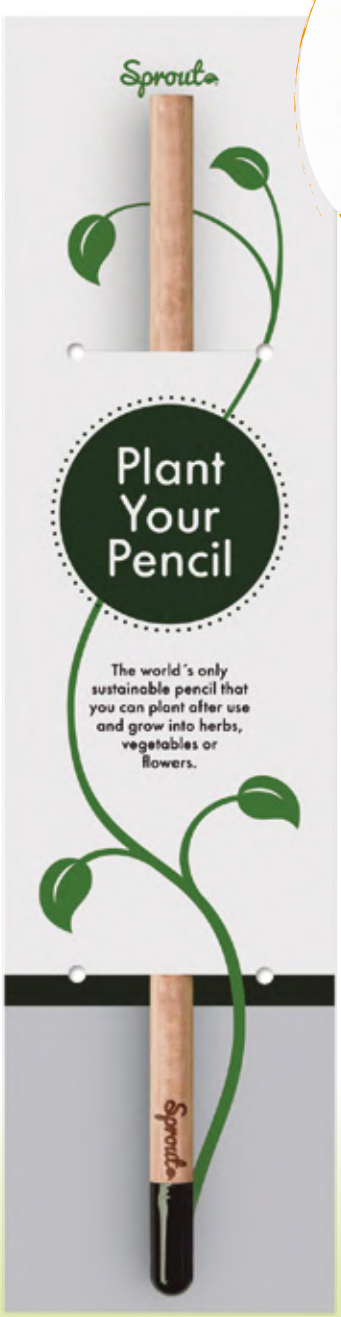

Standard cardboard packaging

back

80%

Personalised cardboard packaging

MOQ 500
MOQ 1000 (Pencil + personalised cardboard packaging)

Decoration:

SPROUT™ PENCIL

53062 / 53070
A LE
B DG: 4-colour process

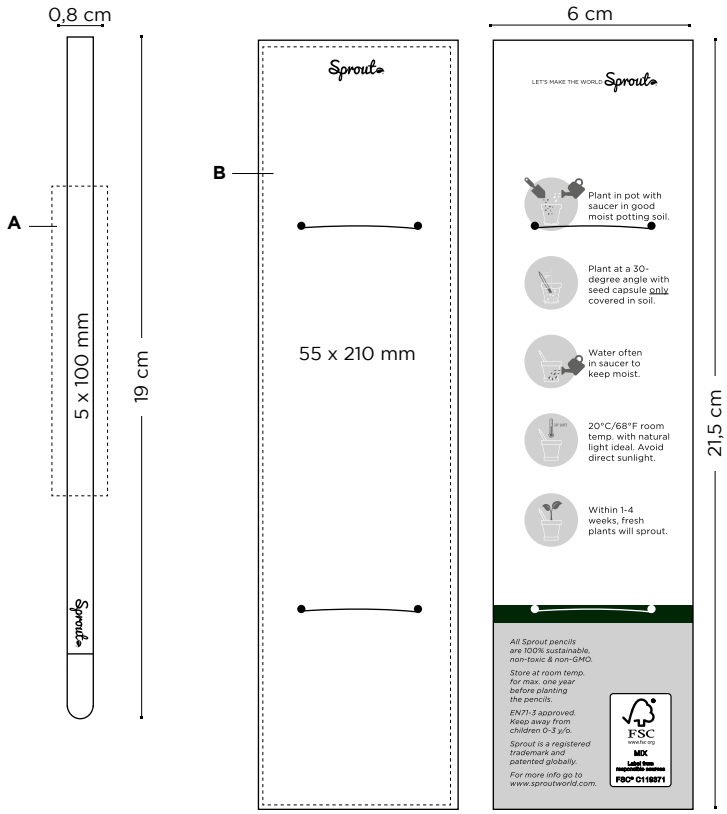

Plant instructions included on the back side.
For customized cardboard, you can change the font and colours!

Writing modes:

Pencil

PC
HB Ø 2,3mm

Printing techniques:

(DG)
DIGITAL

(LE)
LASER

External packaging:

500 ± 2,5 Kg Only pencil
± 5 Kg with cardobard packaging

Packaging:

FSC
www.fsc.org

Check out the video

PERMANENT MARKER ecolutions®

48h

MADE FROM 51% OF RECYCLED MATERIAL* & **100% RECYCLABLE**

Made from pharmaceutical waste.

MANUFACTURED AND PRINTED IN BIC FACTORIES

BIC® PERMANENT MARKER ecolutions®
1210

02

Colour ink

100%

02

*The percentage is calculated on total weight of product excluding ink system

Add the Möbius loop to your artwork at no additional charge. Please specify it on your order. (Möbius loop imprint defaults to left-hand hand corner.)

MOQ 250u.

Decoration:

BIC® PERMANENT MARKER ecolutions®
1210
A SP: max. 1 col.

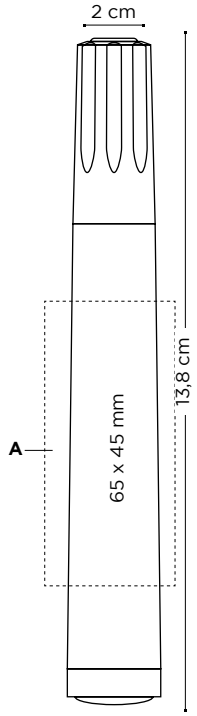

ecolutions® Made with 51% recycled material.

Price (DKK)

BIC® PERMANENT MARKER ecolutions® 1210	250-499	500-999	1000-2499	2500-4999	5000-9999	10000-24999	25000-49999
SP	[illegible]	[illegible]	[illegible]	[illegible]	[illegible]	①	①

Prices include 1 colour screenprint in one position.
① Price under request.

Writing modes:

Marker

MK

Printing techniques:

(SP) SCREEN PRINTING

External packaging:

250 ± 2,6 Kg

MADE IN FRANCE

50 MM X 75 MM ADHESIVE NOTEPADS ecolutions®

MADE OF 100% RECYCLED FIBRE*
& **100% RECYCLABLE**

MANUFACTURED AND PRINTED IN BIC FACTORIES

100%

Ideal pocket size
for mailing campaigns!

Decoration:

BIC® 50 MM X 75 MM ADHESIVE NOTEPADS
A DG: 4-colour process

MOQ 500u.

- 25 ecolutions® 3520
- 50 ecolutions® 3550
- 100 ecolutions® 3580

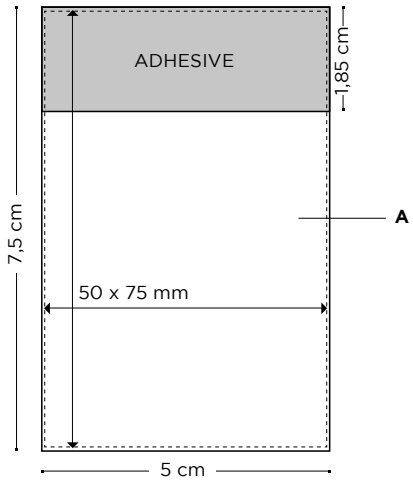

Price (DKK)

BIC® 50 MM X 75 MM ADHESIVE NOTEPADS	500-999	1000-2499	2500-4999	5000-9999	10000-24999	25000-49999
ecolutions® 3520						
DG	[illegible]	[illegible]	[illegible]	[illegible]	ⓘ	ⓘ
ecolutions® 3550						
DG	[illegible]	[illegible]	[illegible]	[illegible]	ⓘ	ⓘ
ecolutions® 3580						
DG	[illegible]	[illegible]	[illegible]	[illegible]	ⓘ	ⓘ

Additional charges:

Exact colour match on pad	[illegible]

Prices include 4-colour process imprint.
Orders must be multiples of the minimum order quantity.
Additional charge for shrink-wrapped pack: [illegible]
ⓘ Price under request.

External Packaging:

1000 ± 8,7 Kg — 25
500 ± 8,5 Kg — 50
250 ± 8,4 Kg — 100

Exact colour match:

≥ 500 units

Paper type:

Recycled 80g

Special packaging: shrink-wrapped

Nº Sheets	Units per pack
25	10
50	5
100	1

Optional Packaging:
Cello Wrap 1, 2, 3 units

Printing techniques:

(DG)
DIGITAL

MADE IN SPAIN

*The percentage is calculated exluding backsheet

Ecological products

68 MM X 75 MM ADHESIVE NOTEPADS ecolutions®

MADE OF 100% RECYCLED FIBRE*
& **100% RECYCLABLE**

MANUFACTURED AND PRINTED IN BIC FACTORIES

100%

Sticky Notes ideal to always take your messages with you!

Decoration:

BIC® 68 MM X 75 MM ADHESIVE NOTEPADS
A DG: 4-colour process

MOQ 500u.

- 25 ecolutions® 3500
- 50 ecolutions® 3530
- 100 ecolutions® 3560

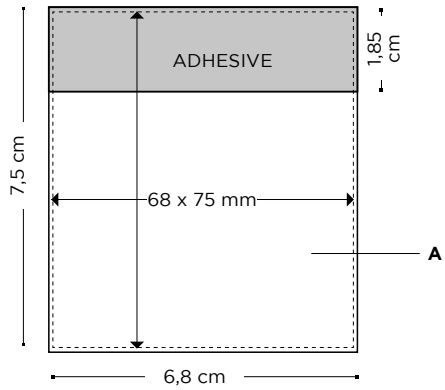

Price (DKK)

BIC® 68 MM X 75 MM ADHESIVE NOTEPADS	500-999	1000-2499	2500-4999	5000-9999	10000-24999	25000-49999
ecolutions® 3500						
DG	[illegible]	[illegible]	[illegible]	[illegible]	ⓘ	ⓘ
ecolutions® 3530						
DG	[illegible]	[illegible]	[illegible]	[illegible]	ⓘ	ⓘ
ecolutions® 3560						
DG	[illegible]	[illegible]	[illegible]	[illegible]	ⓘ	ⓘ

Additional charges:

Exact colour match on pad	[illegible]

Prices include 4-colour process imprint.
Orders must be multiples of the minimum order quantity.
Additional charge for shrink-wrapped pack: [illegible]
ⓘ Price under request.

External Packaging:

500 ± 5,7 Kg — 25
250 ± 5,4 Kg — 50
130 ± 5,6 Kg — 100

Exact colour match:

≥ 500 units

Paper type:

Recycled 80g

Special packaging: shrink-wrapped

Nº Sheets	Units per pack
25	10
50	5
100	1

Optional Packaging:
Cello Wrap 1, 2, 3 units

Printing techniques:

(DG)
DIGITAL

MADE IN SPAIN

*The percentage is calculated exluding backsheet

Ecological products

75 MM X 75 MM ADHESIVE NOTEPADS ecolutions®

MADE OF 100% RECYCLED FIBRE*
& **100% RECYCLABLE**

MANUFACTURED AND PRINTED IN BIC FACTORIES

100%

Large imprint area in a small size!

Decoration:

BIC® 75 MM X 75 MM ADHESIVE NOTEPADS
A DG: 4-colour process

MOQ 500u.

25 ecolutions® 3505
50 ecolutions® 3535
100 ecolutions® 3565

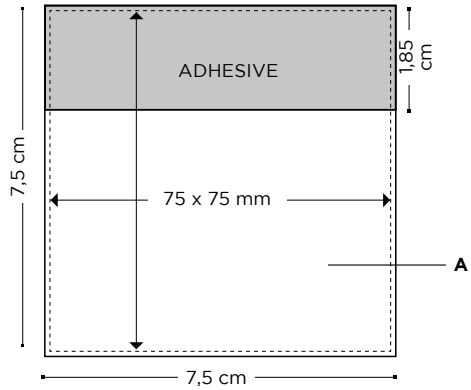

Price (DKK)

BIC® 75 MM X 75 MM ADHESIVE NOTEPADS ecolutions® 3505	500-999	1000-2499	2500-4999	5000-9999	10000-24999	25000-49999
DG	0,86	0,82	0,76	0,69	ⓘ	ⓘ
ecolutions® 3535						
DG	0,96	0,94	0,93	0,46	ⓘ	ⓘ
ecolutions® 3565						
DG	10,49	10,33	10,29	0,92	ⓘ	ⓘ

Additional charges:

Exact colour match on pad	1300,00 DKK

Prices include 4-colour process imprint.
Orders must be multiples of the minimum order quantity.
Additional charge for shrink-wrapped pack: 0,39 DKK
ⓘ Price under request.

External Packaging:

500 ± 6,2 Kg
25

250 ± 5,9 Kg
50

130 ± 6,1 Kg
100

Exact colour match:

≥ 500 units

Paper type:

☐ Recycled 80g

Special packaging: shrink-wrapped

Nº Sheets	Units per pack
25	10
50	5
100	1

Optional Packaging:
Cello Wrap 1, 2, 3 units

Printing techniques:

(DG)
DIGITAL

MADE IN SPAIN

*The percentage is calculated exluding backsheet

101 MM X 75 MM ADHESIVE NOTEPADS ecolutions®

MADE OF 100% RECYCLED FIBRE*
& **100% RECYCLABLE**

MANUFACTURED AND PRINTED IN BIC FACTORIES

Indispensable in any office!
Most popular sticky Notes pad size!

100%

Alternate 2 messages for double-impact communication!

Decoration:

BIC® 101 MM X 75 MM ADHESIVE NOTEPADS
A DG: 4-colour process

25	ecolutions® 3510	**MOQ 500u.**
50	ecolutions® 3540	**MOQ 250u.**
100	ecolutions® 3570	**MOQ 500u.**

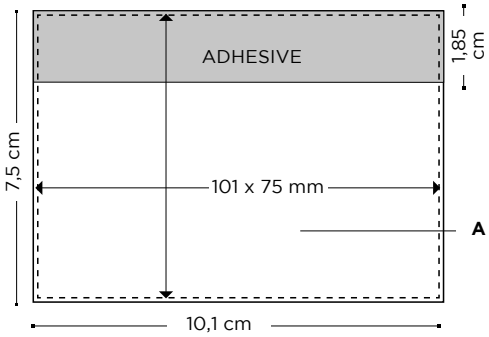

Price (DKK)

BIC® 101 MM X 75 MM ADHESIVE NOTEPADS & ALTERNATING SHEET	250-499	500-999	1000-2499	2500-4999	5000-9999	10000-24999	25000-49999
ecolutions® 3510							
DG	-	[illegible]	[illegible]	[illegible]	[illegible]	ⓘ	ⓘ
ecolutions® 3540							
DG	[illegible]	[illegible]	[illegible]	[illegible]	[illegible]	ⓘ	ⓘ
ecolutions® 3570							
DG	-	[illegible]	[illegible]	[illegible]	[illegible]	6[illegible]3	ⓘ

Additional charges:

Exact colour match on pad	[illegible]K

Prices include 4-colour process imprint.
Orders must be multiples of the minimum order quantity.
Additional charge for shrink-wrapped pack: [illegible]K
ⓘ Price under request.

External Packaging:

500 ± 8,2 Kg — 25
250 ± 8 Kg — 50
130 ± 8,3 Kg — 100

Exact colour match:

≥ 500 units

Paper type:

☐ Recycled 80g

*The percentage is calculated exluding backsheet

Special packaging: shrink-wrapped

Nº Sheets	Units per pack
25	10
50	5
100	1

Optional Packaging:
Cello Wrap 1, 2, 3 units

Printing techniques:

(DG)
DIGITAL

MADE IN SPAIN

MEDIUM ADHESIVE DIE CUT NOTEPADS ecolutions®

MADE OF 100% RECYCLED FIBRE*
& **100% RECYCLABLE**

MANUFACTURED AND PRINTED IN BIC FACTORIES

Decoration:

BIC® MEDIUM ADHESIVE DIE CUT NOTEPADS
A DG: 4-colour process

MOQ 500u.

25 ecolutions® 3602
50 ecolutions® 3606
100 ecolutions® 3610

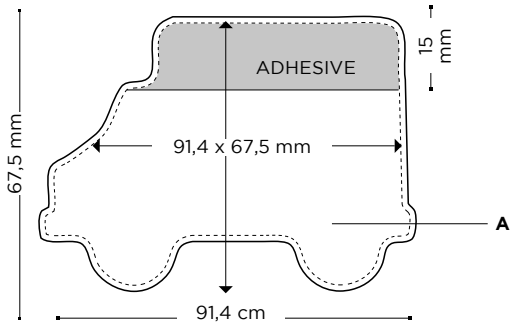

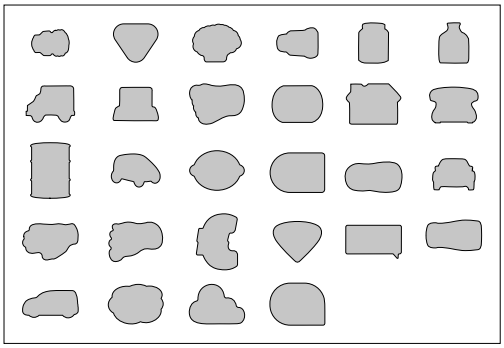

Price (DKK)

BIC® MEDIUM ADHESIVE DIE CUT NOTEPADS	500-999	1000-2499	2500-4999	5000-9999	10000-24999	25000-49999
ecolutions® 3602						
DG	[redacted]	[redacted]	[redacted]	[redacted]	ⓘ	ⓘ
ecolutions® 3606						
DG	[redacted]	[redacted]	[redacted]	[redacted]	ⓘ	ⓘ
ecolutions®3610						
DG	[redacted]	[redacted]	[redacted]	[redacted]	ⓘ	ⓘ

Additional charges:

Exact colour match on pad	[redacted]
Custom made shape set up charge (per order &/or shape)	[redacted]
Repeat order	Free

Prices include 4-colour process imprint.
Orders must be multiples of the minimum order quantity.
Additional charge for shrink-wrapped pack: [redacted]
ⓘ Price under request.

External Packaging:

400 ± 6,6 Kg — 25

200 ± 6,4 Kg — 50

100 ± 6,4 Kg — 100

Exact colour match:

≥ 500 units

Paper type:

☐ Recycled 80g

Special packaging: shrink-wrapped

Nº Sheets	Units per pack
25	10
50	5
100	1

Optional Packaging:
Cello Wrap 1, 2, 3 units

Printing techniques:

(DG)
DIGITAL

MADE IN SPAIN

*The percentage is calculated exluding backsheet

101 MM X 101 MM ADHESIVE NOTEPADS ecolutions®

MADE OF 100% RECYCLED FIBRE*
& **100% RECYCLABLE**

MANUFACTURED AND PRINTED IN BIC FACTORIES

70%

21%

Take advantage of this large imprint area!

Decoration:

BIC® 101 MM X 101 MM ADHESIVE NOTEPADS
A DG: 4-colour process

MOQ 500u.

- 25 ecolutions® 3516
- 50 ecolutions® 3546
- 100 ecolutions® 3576

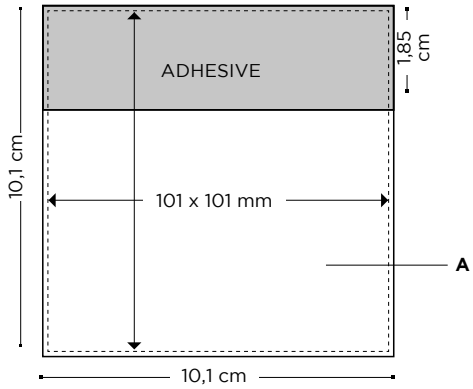

Price (DKK)

BIC® 101 MM X 101 MM ADHESIVE NOTEPADS ecolutions® 3516	500-999	1000-2499	2500-4999	5000-9999	10000-24999	25000-49999
DG	[redacted]	[redacted]	[redacted]	[redacted]	ⓘ	ⓘ
ecolutions® 3546						
DG	[redacted]	[redacted]	[redacted]	[redacted]	ⓘ	ⓘ
ecolutions® 3576						
DG	[redacted]	[redacted]	[redacted]	[redacted]	ⓘ	ⓘ

Additional charges:

Exact colour match on pad	[redacted]

Prices include 4-colour process imprint.
Orders must be multiples of the minimum order quantity.
Additional charge for shrink-wrapped pack: [redacted]
ⓘ Price under request.

External Packaging:

400 ± 9,5 Kg
25

200 ± 9,1 Kg
50

100 ± 8,7 Kg
100

Exact colour match:

≥ 500 units

Paper type:

Recycled 80g

Special packaging: shrink-wrapped

Nº Sheets	Units per pack
25	10
50	5
100	1

Optional Packaging:
Cello Wrap 1, 2, 3 units

Printing techniques:

(DG)
DIGITAL

MADE IN SPAIN

*The percentage is calculated exluding backsheet

Ecological products

101 MM X 130 MM ADHESIVE NOTEPADS ecolutions®

MADE OF 100% RECYCLED FIBRE*
& **100% RECYCLABLE**

Large imprint area for big messages!
Don't miss anything!

MANUFACTURED AND PRINTED IN BIC FACTORIES

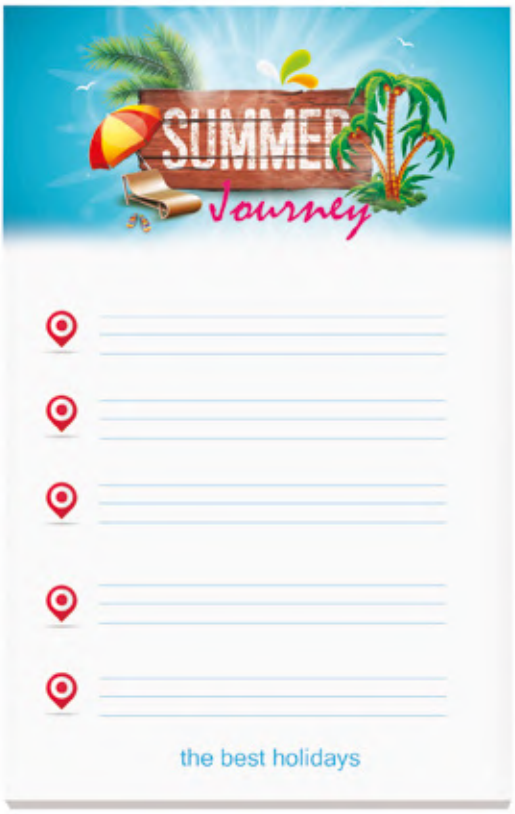

70%

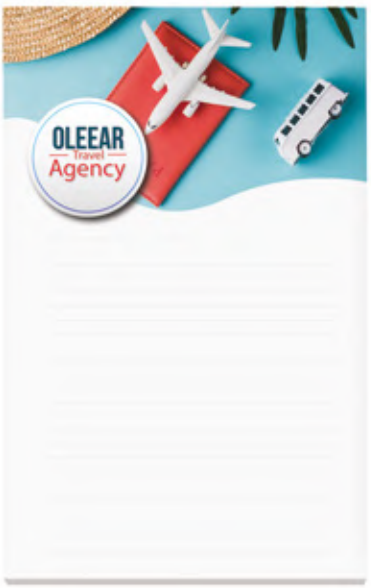

50%

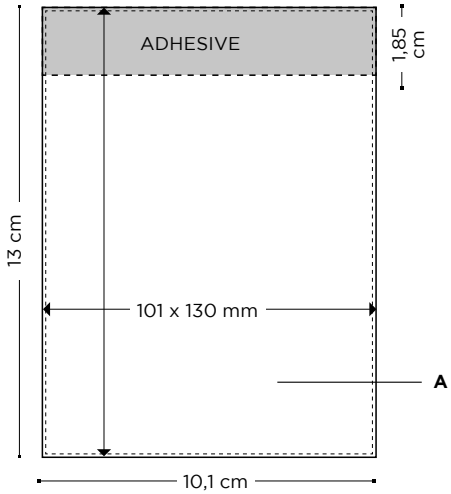

Decoration:

BIC® 101 MM X 130 MM ADHESIVE NOTEPADS
A DG: 4-colour process

MOQ 500u.

25 ecolutions® 3515
50 ecolutions® 3545
100 ecolutions® 3575

Price (DKK)

BIC® 101 MM X 130 MM ADHESIVE NOTEPADS	500-999	1000-2499	2500-4999	5000-9999	10000-24999	25000-49999
ecolutions® 3515						
DG	[illegible]	[illegible]	[illegible]	[illegible]	ⓘ	ⓘ
ecolutions® 3545						
DG	[illegible]	[illegible]	[illegible]	[illegible]	ⓘ	ⓘ
ecolutions® 3575						
DG	[illegible]	[illegible]	[illegible]	[illegible]	ⓘ	ⓘ

Additional charges:

Exact colour match	[illegible]

Prices include 4-colour process imprint.
Orders must be multiples of the minimum order quantity.
Additional charge for shrink-wrapped pack: [illegible]
ⓘ Price under request.

External Packaging:

250 ± 8,5 Kg — 25

125 ± 8,2 Kg — 50

65 ± 8,3 Kg — 100

Exact colour match:

≥ 500 units

Paper type:

☐ Recycled 80g

Special packaging: shrink-wrapped

Nº Sheets	Units per pack
25	10
50	5
100	1

Optional Packaging:
Cello Wrap 1, 2, 3 units

Printing techniques:

(DG)
DIGITAL

MADE IN SPAIN

*The percentage is calculated exluding backsheet

New sustainable packaging

Essential part of our products

Reduce,
Reuse,
Recycle

ECOLOGICAL VALUE

- Reduce and optimize recycled and recyclable materials.
- Reduce the carbon footprint.

BIC® EXPERIENCE

- Aesthetic component giving an added value to writing instruments.
- BIC® logo to identify the quality and value of BIC® brand.

SMART DESIGN

- Avoid throw-away products with a second life for the packaging.
- Packaging available for different writing instruments.
- Interactive packaging with QR code.

SOCIAL VALUE

- Cooperation with Treedom® with the BIC Graphic forest in Kenya.
- Support agro-local projects for local people in Kenya.

CERTIFIED MATERIALS

- 100% Recycled cardboard.
- Plastics such as PET, PP or PS that are 100% recyclable.
- Raw materials from sustainable forest (FSC).

Let's join to our BIC Graphic Europe forest

The packaging with the Treedom® logo is contributing to the creation of the BIC Graphic Forest in Kenya. Thanks to your support, with this campaign, we can improve the environment (reducing the carbon footprint) and support agro-forestry projects that implement sustainable ecosystems. Helping the environment and also people. All trees will narrate their history, with photos, updates and GPS coordinates with total transparency. The forest will grow over time and can be followed online.

More info in **www.treedom.net**

Plant your tree and follow it online as it helps the environment

treedom® let's green the planet

–90,100 KG CO_2

with the establishment of the new BIC Graphic Europe Forest

Learn more here

PACKAGING

ECO SLEEVE New!

985240

Special recycled sleeve for all BIC® writing instruments except graphite pencils.

Price (DKK)
164

RECYCLED CARDBOARD

MADE IN SPAIN

treedom

Special packaging for pens with clip printed:

- BIC MEDIA CLIC
- BIC CLIC STICK
- BIC SUPER CLIP
- BIC WIDE BODY
- BIC ATLANTIS
- BIC FINE STYLE

Check out Treedom iniciative:

WINDOW BOX New!

985241

Premium design packaging for all BIC® writing instruments except graphite pencils.

Price (DKK)
70

FSC www.fsc.org

MADE IN SPAIN

treedom

Special packaging for:

- BIC METAL PENS

Re-use me as a business cardholder

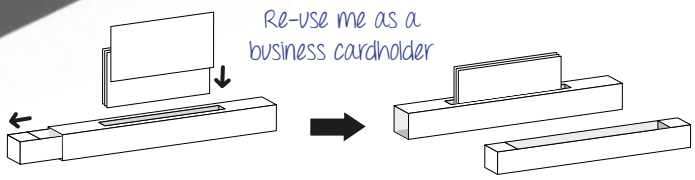

Check out Treedom iniciative:

PLASTIC POUCH New!

985242

Special design for this packaging which fits in any writing instruments and for 3 graphite pencils.

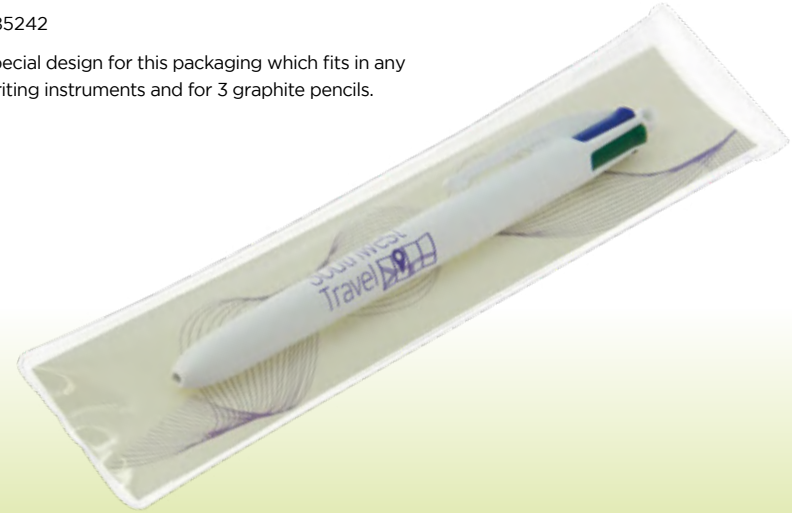

Price (DKK)
306

FSC www.fsc.org

RECYCLABLE PLASTIC

MADE IN SPAIN

Use me as bookmark

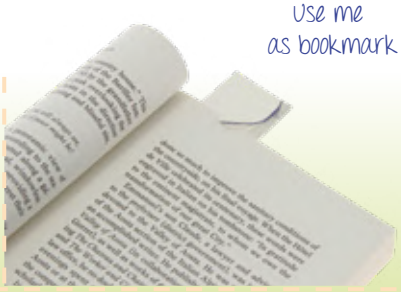

BIC MARKING SET New!

985243

Packaging designed for all types of markers products.

Price (DKK)
485

FSC www.fsc.org · RECYCLABLE PLASTIC · MADE IN SPAIN

Special packaging for pens with clip printed:

- BIC 3 BRITELINER
- BIC 3 MARK-IT
- BIC 3 Velleda GRIP
- BIC 4 Velleda FINE

Use me as bookmark

BIC GIFT BOX New!

985241

Special set of notebooks and writing instruments.

	Price (DKK)
A5	152
A6	1417

FSC www.fsc.org · MADE IN SPAIN

Special packaging for Dual Notebook A5 & A6 and:

- BIC 4-COLOURS (SP)
- BIC MEDIA CLIC (SP)
- BIC SUPER CLIP (SP)

BIC OUTER BOXES

Special design for all the outer boxes related with all the writing instruments.

FSC www.fsc.org · MADE IN SPAIN

BIC graphic

Your Brand Ambassador

www.bicgraphic.eu